Lauritz Knudsen
Electrical & Automation

d sine DZ Moulded Case Circuit Breaker

ABOUT US

Lauritz Knudsen Electrical & Automation, formerly known as L&T Switchgear, is a leading player in the electrical industry owing to its 70+ years of strong legacy and commitment to the nation's growth. The brand is dedicated to providing a wide range of electrical and automation products and solutions to vital sectors of the economy, including industries, utilities, infrastructure, buildings, and agriculture. Our extensive portfolio includes low-voltage and medium-voltage switchgear, automation solutions, tailored software, and services.

With manufacturing operations in Ahmednagar, Vadodara, and Coimbatore, we adhere to global standards of excellence. Our operations are supported by well-equipped, in-house design and development centers, as well as tooling facilities, ensuring precision in manufacturing.

We proudly operate six Switchgear Training Centers (STCs) across Pune, Lucknow, Coonoor, Vadodara, Delhi, and Kolkata. These centers offer tailor-made classroom courses and lab learning experiences for technicians, customers, engineers, professionals, and students.

With a deep national presence and one of the largest electrical distribution networks, comprising over 1500 partners across the country, we are committed to driving excellence and delivering superior products and solutions that power India's growth journey.

Index

STANDARDS & APPROVALS	5
OVERVIEW	6
RANGE FEATURES	7
MCCBS FOR POWER DISTRIBUTION	8
RELEASE FEATURES	10
ACCESSORIES	23
INTERNAL ACCESSORIES	24
EXTERNAL ACCESSORIES	28
PLUG-IN MODULE	29
MECHANICAL INTERLOCK (MIL)	34
TERMINATIONS	37
MODULES	38
EXTERNAL NEUTRAL SENSOR	42
ADDITIONAL TECHNICAL INFORMATION	43
CHARACTERISTIC CURVES	45
WIRING DIAGRAMS	62
DIMENSIONS	63

FEATURES TO MEET EVERY APPLICATION

Contact System
- **Double Break** with **low let-through** energy
- High Breaking Capacity up to **200kA @ 415V AC**
- **100kA @690V AC** at 100% Ics
- **50kA @ 800V AC** offering for Solar PV String inverters
- **1000V/1500V PV DC Offering**

Thermal - Magnetic Release
- **Extended Overload Setting of 67%**
- **16A to 800A Offering**
- **Ambient Temperature Compensation**
- Suitable for wide temperature range

Mechanism
- **Class II Front Facia**
- Double Insulation
- Positive Isolation
- **High Electrical and Mechanical Life**

Electronic Release
- **Extended Overload Setting of 25%**
- **Individual Fault Indication** LEDs
- Battery Operated **In-built Display**
- **Advanced** Metering and Protection
- **Motor Protection Variant with effective Type 2 Coordination**

Modular Architecture
- **Compact Size**
- Late Personalization
- Interchangeability of Releases
- **Reduced Inventory** for internal accessories

Modules
- **Temperature Monitoring** & Protection
- **Zone Selective Interlocking** for effective Selectivity
- **Communication Module** for metering & control
- Remote Operation for **Motorized MCCB**
- Breaker Status, Alarm & Trip with Records

CONNECTED TO DRIVE ENERGY EFFICIENCY

Data Analytics | **Trend Analysis** | **Real Time Monitoring**

Status & Control | **Metering & Protection** | **Data Acquisition**

FUTURE READY FOR COMPLIANCE AND NEW APPLICATIONS

RESILIENT FOR BETTER SAFETY AND MAINTENANCE

Inventory & Application friendly Internal Accessories

Reduced Downtime with Plug-in & Drawout Modules

Multiple options for Mechanical Interlocking

Robust Rotary & Electrically Operated Mechanisms

Shrouds for increased personnel safety

Versatile Range of Terminations

Standards & Approvals

Dsine DZ range of MCCBs and Accessories comply with following international standards

1.IEC 60947-1, EM 60947-1, IS/IEC 60947-1
Low voltage switchgear and controlgear, Part1: General Rules

2.IEC 60947-2, EM 60947-2, IS/IEC 60947-2
Low voltage switchgear and controlgear, Part2: Circuit Breakers

3.IEC 60947-3, EM 60947-3, IS/IEC 60947-3
Low voltage switchgear and controlgear, Part3: Switches, disconnectors, switch - disconnectors and fuse combination units.

4.IEC 6094 7-4, EM 60947-4, IS/IEC 60947-4
Low voltage switchgear and controlgear, Part4: Contactors and motor starters

Third party certificates (ERDA/CPRI) are available for dsine DZ range of MCCBs

NABL

NABL accreditation acknowledges the technical proficiency of testing, calibration, or medical laboratories for specific tasks in accordance with the ISO/IEC 17025:2005 Standard. Accredited laboratories are obligated to consistently meet the criteria of laboratory accreditations, which are assessed during Surveillance and Re-assessment visits by NABL. Additionally, accredited laboratories must demonstrate their technical expertise through successful participation in recognized Proficiency Testing Programs.

Lauritz Knudsen Switchgear Testing lab holds NABL accreditation, contingent upon ongoing satisfactory adherence to the aforementioned standard and additional NABL requirements. All dsine DZ range MCCBs undergo testing in Lauritz Knudsen NABL accredited Switchgear Testing Lab.

CE Marking

The CE marking signifies that a product meets the essential requirements of relevant European laws or directives concerning safety, health, environment, and consumer protection. Typically, this conformity with directives is achieved through self-declaration and is mandatory for products in the European Economic Area (EEA) to facilitate trade among member countries. The responsibility for affixing the CE marking lies with the manufacturer or their authorized representative within the EEA. This marking allows manufacturers to demonstrate compliance with a common set of laws required by all EEA countries, enabling free trade movement within the EEA.
Regarding Lauritz Knudsen dsine DZ range of MCCBs, it conforms to the low voltage directive 73/23/EEC as amended by directive 93/68/EEC, if it is used for its intended application and is installed and maintained in accordance with professional practices, relevant installation standards, and operating instructions.

IECEE CB SCHEME - DEKRA (KEMA) certified

The IECEE CB Scheme represents a mutual agreement between participating countries and certification organizations. When a manufacturer uses a CB test certificate from an accepted National Certification Body (NCB), they can receive certification marks from those NCBs in the countries where they are located. Lauritz Knudsen dsine DZ range of MCCBs has been certified for the IECEE CB Scheme by DEKRA (KEMA), a globally recognized organization with 150 years of experience in testing, inspection, certification, risk management, and verification.

Committed to Environment

dsine DZ MCCB range complies to RoHS & REACh directives. Smaller footprint, usage of green plastics and halogen free flame retardants, recyclable packaging, low carbon footprint, declaration of PEP & EoLI ensures our commitment towards environment during manufacturing, distribution, installation, use phase and end of life of the product.

Overview

1) Double Break Contact System

a. Compression spring based flipped lock current limiting contact system design

b. Improved contact dynamics
   i. Flipped lock mechanism accelerates the opening of contacts during short circuit
   ii. Higher angular and linear opening per break

c. Improved contact dynamics facilitate
   i. Low Let through energy
   ii. Minimum Cut-off Current
   iii. Higher Voltage breaking capacities

d. erosion compensation continuous service

e. Higher Electrical Life

f. The entire current carrying path is optimised for low watt loss

2) Modular Mechanism

a. Quick make, break and trip operations

b. Suitability Positive Isolation
   i. True indication of Contact system
   ii. Ensure Customer's safety

c. Trip Free mechanism

d. Higher Mechanical life

3) Arc Chamber

a. Optimal design of Arc chamber facilitating efficient and faster Arc quenching even at higher voltage and higher amplitude

4) Electronic Trip Unit

a. Electronic Trip unit family cover entire protection schemes of Electrical system

b. Suitable for 16 A to 1000 A

c. Available from basic LS/IN to high end energy metering & communication versions

d. Dedicated Motor protection ETU for entire range

e. High end versions of ETU family are able to
   i. Communicate - communication module
   ii. Ensure Zone selectivity - ZSI module
   iii. Temperature monitoring and protection using - Temperature module

5) Thermal Magnetic Release

a. Suitable for 16 A to 800 A

b. Wide range of overload protection starting form 67% to 100% In

c. Inbuilt Ambient Temperature Compensation mechanism to ensure same tripping characteristics for wide range of operating temperature

6) Module Integration

a. Modular Architecture

b. No load-line biasing
   i. Either side of MCCB terminals can be used as Load or Line

c. More number of internal accessories for better control

d. Class II insulation from front facia cutout region

Range Features

- Range from 16A to 1000A
- In 3 pole & 4 pole
- Breaking capacities up to 200kA @ 415Vac
- Protection using both thermal magnetic and Electronic based releases
- Various types of terminations
- Fixed and withdrawable versions#
- MCCBs for Motor backup protection
- MCCBs for Distribution and SD versions
- MCCBs for DC applications
- High electrical and mechanical life
- Wide range of operational voltages
- Wide range of common Internal and External accessories
- Conforms to IS/IEC 60947-2, IEC 60947-2, IEC 60068 and EN 60947-2
- RoHS and REACh compliance

DZ0

DZ1

DZ2

DZ4

DZ6

DZ7

MCCBs for Power Distribution

Frame			DZ0-125A		DZ1-160			DZ1-200			DZ2-160				
Type			**C**	**D**	**C**	**D**	**N**	**C**	**D**	**N**	**D**	**N**	**H**	**L**	**D**
Current Range at 50°C In* (A)			**16/20/25/32/ 40/50/63/ 80/100/125**		**16/20/25/32/ 40/50/63/80/ 100/125/160**			**200**			**16/20/25/32/ 40/50/63/80/ 100/125/160**				
Release			TM(VTFM)		TM(VTVM)/ Electronic			TM(VTVM)/ Electronic			TM(VTVM)/ Electronic				
Poles			3P/4P		3P/4P			3P/4P			3P/4P				
Impulse Withstand Voltage Uimp (kV)			8		8			8			8				
Rated Operational Voltage Ue (V AC) (MAX) @ 50/60Hz			415		500			500			690				
Rated Insulation Voltage Ui (V)			800		800			800			1000				
Rated Short circuit breaking capacity	Icu (kA)	220/230V AC 50/60Hz	40	50	45	50	65	45	50	65	45	65	100	150	45
		400/415V AC 50/60Hz	25	36	25	36	50	25	36	50	36	50	80	120	36
		440V AC 50/60Hz	-	-	15	22	40	15	22	40	22	40	65	100	22
		500V AC 50/60Hz	-	-	8	13	18	8	13	18	18	18	20	85	18
		690V AC 50/60Hz	-	-	-	-	-		-	-	9	12.5	20	20	9
		800V AC 50/60Hz	-	-	-	-	-		-	-		-	-	-	-
	Ics as % of Icu	220/230V AC 50/60Hz	100%	50%	100%			100%			100%				
		400/415V AC 50/60Hz													
		440V AC 50/60Hz	-	-											
		500V AC 50/60Hz	-	-											
		690V AC 50/60Hz	-	-											
		800V AC 50/60Hz	-	-	-	-	-		-	-	-	-	-	-	-
Making Capacity (kA) @ 415V AC			50	75.6	50	75.6	105	50	75.6	105	75.6	105	176	264	75.6
Life	Mechanical		30000		30000			20000			30000				
	Electrical @ 415V AC		8000		10000			10000			10000				
Utilization Category															
Standard															
Operating Frequency (Hz)															
Fingerproof Terminals															
Insulation Class (Front Facia cutout region)															
Suitable for isolation															
IP Class															
Pollution Degree															
Load-line bias															
Ambient temperature															
Storage temperature															
Mounting positions in vertical plane															
Dimensions (W*D*H) (mm)	3 Pole		75*60*130		75*60*130			75*60*130			75*75*130				
	4 Pole		100*60*130		100*60*130			100*60*130			100*75*130				
Weight (kg) 3P/4P			0.7/0.9		0.9/1.1			0.9/1.1			1/1.3				
Accessories	Internal	Auxiliary Contact	01 Aux		01 Aux			01 Aux			01 Aux				
		Trip Alarm Contact	01 TAC		01 TAC			01 TAC			01 TAC				
		Shunt Release	01 Shunt or 01 UV		01 Shunt or 01 UV			01 Shunt or 01 UV			01 Shunt or 01 UV				
		Under Voltage Release													
	External	Rotary Operating Mechanism (DIR/EXT)	✓		✓			✓			✓				
		Mechanical Interlock Kit	×		✓			✓			✓				
		Spreader Terminals	×		✓			✓~			✓				
		Rear Terminals	×		✓			×			✓				
		Box-Clamp	✓		✓			×			✓				
		Plug-in	×		✓			×			✓				
		Draw-out	×		×			×			✓				

* Current Rating is at 40°C for DZ0 MCCB
$ Available only in Electronic Trip Unit
^ Only for 800V AC
~ Spreader terminals are mandatory

DZ4-250A				DZ6-400								DZ7-800								DZ7-1000			
N	H	L	R	D	N	H	L	R	W	Y	Z	D	N	H	L	R	W	Y	Z	D	N	H	L
160/200/250				125$/160$/200/250/320/400								500/630/800								1000			
TM(VTVM)/Electronic				TM(VTVM)/Electronic								TM(VTVM)/Electronic								Electronic			
3P/4P				3P/4P								3P/4P								3P/4P			
8				8								8								8			
690				800								800								690			
1000				1000					1250			1000					1250			1000			
65	100	150	200	45	65	100	150	200	-	-	-	45	65	100	150	200	-	-	-	45	65	100	150
50	80	120	200	36	50	80	120	200	-	-	-	36	50	80	120	200	-	-	-	36	50	80	120
40	65	100	150	22	40	65	100	150	-	-	-	22	40	65	100	150	-	-	-	22	40	65	100
36	55	85	140	18	36	55	85	140	-	-	-	18	36	55	85	140	-	-	-	18	36	55	85
12.5	20	50	100	9	12.5	20	50	100	-	-	-	9	12.5	20	50	100	-	-	-	9	12.5	20	20
-	-	-	-	-	-	-	-	-	25	36	50	-	-	-	-	-	25	36	50	-	-	-	-
100%				100%							-	100%							-	100%			
											-								-				
											-								-				
											-								-				
											-								30				
-	-	-	-	-	-	-	-	-	25	30	40	-	-	-	-	-	25	30	40	-	-	-	-
105	176	264	-	75.6	105	176	264	440	-	-	-	75.6	105	176	264	440	-	-	-	75.6	105	176	264
25000				20000								20000								20000			
10000				8000					4000^			7500					2500^at 630A 2000^at 800A			3000			
A																							
IS/IEC 60947-2, IEC 60947-2, EN 60947-2																							
50/60																							
YES																							
Class II																							
YES																							
IP40 and IP54 with Extended ROM																							
III																							
NO																							
-25°C to 55°C for TM and -25°C to 75°C for ETU																							
-35° C to 85°C																							
Vertical and 90° both directions																							
105*90*165				120*105*205								180*105*250								180*105*250			
140*90*165				160*105*205								240*105*250								240*105*250			
1.8/2.1				3.5/5								6.9/8.9								6.9/8.9			
02 Aux				03 Aux								03 Aux								03 Aux			
01 TAC				01 TAC								01 TAC								01 TAC			
01 Shunt or 01 UV				02 UV or 02 Shunt or 1UV+1Shunt								02 UV or 02 Shunt or 1UV+1Shunt								02 UV or 02 Shunt or 1UV+1Shunt			
✓				✓								✓								✓			
✓				✓								✓								✓			
✓				✓								✓								✓~			
✓				✓								✓								×			
✓				✓								×								×			
✓				✓								✓								×			
✓				✓								✓								×			

Release Features

- All Electronic Trip unit comply EMI & EMC as per IEC 60947-2
- Wide range of basic & advanced protections using thermal magnetic and Electronic based releases
- Individual LEDs for fault indication
- Long time (overload) setting starts from 0.25 In for iTRP release and 0.67 In for thermal magnetic release
- In-built earth fault and neutral protection
- In-built display module for enhanced user interface
- No need for external power supply for breaker settings and viewing trip records
- Communicable MCCBs from 40A to 1000A
- Available communication protocols-TCP IP, Modbus

Release Type	*i* TM	*i* TRP-1	*i* TRP-2	*i* TRP-3	*i* TRP-3C	*i* TRP-4	*i* TRP-5
Protection	LI	LS/IN	LSIN	LSING	LSING + Current metering	LSING + Current metering	*i* TRP-4 + Advanced Metering + Advanced Protection
Communication	-	-	-	-	Yes	Yes	Yes
Display	-	-	-	-	-	Yes	Yes

Motor Backup Protection Release

Release	Thermal magnetic	Electronic
Release type	Only Magnetic	*i* TRP-M3
Protection	Only Instantaneous	LRISUG

L Protection against Overload

S Protection against Short Circuit with intentional time delaya

I Protection against Short Circuit without time delay

N Protection against Neutral Overload

G Protection against Earth Fault

R Protection against Locked Rotor Overload

U Protection against Current Unbalance

Frames & Releases at Glance

Frames	DZ0	DZ1	DZ2	DZ4	DZ6	DZ7
Power Distribution						
Thermomagnetic trip units						
FTFM	16A, 20A, 25A, 32A, 40A,50A, 63A, 80A, 100A, 125A	-	-	-	-	-
VTVM	-	16A, 20A, 25A, 32A, 40A,50A, 63A, 80A, 100A, 125A, 160A, 200A	16A, 20A, 25A, 32A, 40A,50A, 63A, 80A, 100A, 125A, 160A	160A, 200A, 250A	160A, 200A, 250A, 320A, 400A	500A, 630A, 800A
Electronic trip units						
iTRP-1	-	25A*, 40A*, 63A, 100A, 160A, 200A	40A*, 63A, 100A, 160A	160A, 200A, 250A	125A#, 160A#, 200A*, 250A, 320A, 400A	400A*, 500A, 630A, 800A, 1000A
iTRP-2						
iTRP-3						
iTRP-3C						
iTRP-4						
iTRP-5		-				
Motor Protection						
Motor Protection - Thermal						
M	-	16A, 20A, 25A, 32A, 40A,50A, 63A, 80A, 100A, 125A, 160A, 200A	16A, 20A, 25A, 32A, 40A,50A, 63A, 80A, 100A, 125A, 160A	160A, 200A, 250A	250A, 320A, 400A	500A, 630A, 800A
Motor Protection - Electronic Trip Units						
iTRP-M3	-	40A, 63A, 100A, 160A, 200A	40A, 63A, 100A, 160A	160A, 200A, 250A	250A, 320A, 400A	500A, 630A, 800A

* Not applicable for iTRP-3C
# Applicable for iTRP-1

Thermomagnetic trip units

- Adjustable overload setting
- Adjustable short circuit setting*
- True RMS sensing

TM (iTM-AA)	
Frame	**DZ0/ DZ1/ DZ2/ DZ4/ DZ6/ DZ7**
Rated Current	16A - 800A
Protection	LI
Over Load (Phase)	
Current Setting I_r (I_r = x I_n)	0.67 to 1 x I_n
Instantaneous	
Current Setting I_i (I_i = x I_n)	6 to 12 x I_n*

*16 A to 50 A : Fixed Magnetic 375 A

Electronic Releases

iTRP-1

- Wide range of overload setting starting from 0.25I_n
- Adjustable Trip class
- Neutral overload protection
- Short circuit setting with delay or Instantaneous option
- Adjustable Instantaneous Setting
- Thermal Memory with option of Defeat
- Provision for release testing

iTRP-1	
Frame	**DZ1/ DZ2/ DZ4/ DZ6/ DZ7**
Rated Current (A)	25A - 1000A
Protection	LS/IN
Over Load (Phase)	
Current Setting I_r(I_r = x I_n)	0.25 to 1 x I_n (in step of 0.05)
Time delay, T_r (Inverse)	10s at 6I_r, 3s at 6I_r, 10s at 7.2 I_r, 3s at 7.2I_r
Protection Mode	ON/OFF
Thermal Memory	ON/OFF
Over Load (Neutral)	
Current Setting I_N (I_N = x I_r)	OFF / 1.0 x I_r
Time delay, T_r (Inverse)	As per Overload Curve Setting
Protection Mode	ON/OFF
Short Circuit	
Current Setting I_s (I_s = x I_r)	1.5 to 12 x I_r (in step of 0.5) 25A to 500A 1.5 to 10 x I_r (in step of 0.5)630A 1.5 to 8 x I_r (in step of 0.5) 800A,1000A
Time delay, T_s	As per I^2t curve /150 msec
I^2t	ON/OFF
Instantaneous	
Current Setting I_i(I_i = x I_n)	1.5 to 12 x I_n (in step of 0.5) 25A to 500A 1.5 to 10 x I_n (in step of 0.5)630A 1.5 to 8 x I_n (in step of 0.5) 800A,1000A
LED Indication	
Power/Release Status LED (Green)	
Blinking @ 500ms (ON/OFF)	Power ON
Steady ON	Pickup
Steady OFF	Power OFF

iTRP-2

- Wide range of overload settings from $0.25I_n$
- Adjustable neutral overload protection
- Short circuit setting with delay
- Adjustable instantaneous setting
- Thermal memory defeat
- Provision for release testing
- Individual fault indication LEDs

iTRP-2	
Frame	**DZ1/ DZ2/ DZ4/ DZ6/ DZ7**
Rated Current (A)	25A - 1000A
Protection	LSIN
Over Load (Phase)	
Current Setting I_r (I_r = x I_n)	0.25 to 1 x I_n (in step of 0.05)
Time delay, T_r (Inverse)	10s at $6I_r$
Protection Mode	ON/OFF
Thermal Memory	Enable/Disable
Over Load (Neutral)	
Current Setting I_N (I_N = xI_r)	OFF / 0.5/ 1.0/ 2.0 x I_r
Time delay, T_r (Inverse)	As per Overload Curve Setting
Protection Mode	ON/OFF
Short Circuit	
Current Setting Is (I_s = x I_r)	OFF, 1.5, 3, 4.5, 5.5, 6, 7, 8.5, 10 x Ir [DZ1 to DZ6, DZ7 (500A,630A)] OFF, 1.5, 3, 3.5, 5, 4.5, 6, 6.5, 8 x Ir [DZ7 (800A,1000A)]
Time delay, T_s	100ms/200ms
I^2t	ON/OFF
Protection Mode	ON/OFF
Instantaneous	
Current Setting Ii (I_i = x I_n)	OFF, 6, 12 x In [DZ1 to DZ6, DZ7 (500A)] OFF, 6, 10 x In [DZ7 (630A)] OFF, 6, 8 x In [DZ7 (800A,1000A)]
Protection Mode	ON/OFF
LED Indication	
Fault LED (Red)	
Steady ON [if ⓘ button press]	L, S, I
Power/Release Status LED (Green)	
Blinking @ 500ms (ON/OFF)	Power ON
Steady ON	Pickup
Steady OFF	Power OFF

iTRP-3

- Wide range of overload settings from $0.25I_n$
- Adjustable neutral overload protection
- Short circuit setting with delay
- Adjustable instantaneous setting
- Thermal memory defeat
- Provision for release testing
- Individual fault indication LEDs
- Inbuilt earth fault protection

iTRP-3	
Frame	**DZ1/ DZ2/ DZ4/ DZ6/ DZ7**
Rated Current (A)	25A - 1000A
Protection	LSING
Over Load (Phase)	
Current Setting I_r (I_r = x I_n)	0.25 to 1 x I_n (in step of 0.05)
Time delay, t_r (Inverse)	10s at $6I_r$
Protection Mode	ON/OFF
Thermal Memory	Enable/Disable
Over Load (Neutral)	
Current Setting I_N(I_N = x I_r)	OFF / 0.5/ 1.0/ 2.0 x I_r
Time delay, t_r (Inverse)	As per Overload Curve Setting
Protection Mode	ON/OFF
Short Circuit	
Current Setting I_s (I_s = x I_r)	OFF, 1.5, 3, 4.5, 5.5, 6, 7, 8.5, 10 x Ir [DZ1 to DZ6, DZ7 (500A, 630A)] OFF, 1.5, 3, 3.5, 5, 4.5, 6, 6.5, 8 x Ir [DZ7 (800A, 1000A)]
Time delay, t_s	100ms/200ms
I^2t	ON/OFF
Protection Mode	ON/OFF
Instantaneous	
Current Setting I_i (I_i = x I_n)	OFF, 6, 12 x In [DZ1 to DZ6, DZ7 (500A)] OFF, 6, 10 x In [DZ7 (630A)] OFF, 6, 8 x In [DZ7 (800A,1000A)]
Protection Mode	ON/OFF
Earth Fault	
Current Setting I_r (I_r = x I_n)	0.2, 0.4, 0.5, 0.7 x I_n
Time delay, T_r (Inverse)	100ms/200ms
Protection Mode	ON/OFF
LED Indication	
Fault LED (Red)	
Steady ON [if ⓘ button press]	L, S, I, G
Power/Release Status LED (Green)	
Blinking @ 500ms (ON/OFF)	Power ON
Steady ON	Pickup
Steady OFF	Power OFF

iTRP-3C

- Wide range of overload setting from 0.25 In
- Adjustable neutral overload protection
- Short circuit setting with delay
- Adjustable Instantaneous setting
- In-built earth fault protection
- Switchable Thermal memory
- ZSI + Communication through External Module
- Cause of Fault through Communication Module

iTRP-3C	
LSING	
Rated Current, In	50A - 1000A
Frame	DZ1/DZ2/DZ4/DZ6/DZ7
Overload (Phase)	
Current Setting Ir (I_r= x I_n)	0.25 to 1 x I_n (in step of 0.05)
Time delay, T_r (Inverse)	10s at 6I_r
Protection Mode	ON/ OFF
Thermal Memory	Enable / Disable
Overload (Neutral)	
Current Setting I_N (I_N= x I_r)	OFF / 0.5 / 1.0 / 2.0 x I_r
Time delay, T_r (Inverse)	As per Overload Curve Setting
Protection Mode	ON/ OFF
Short Circuit	
Current Setting I_s (I_s= x I_r)	OFF, 1.5, 3, 4.5, 5.5, 6, 7, 8.5, 10 x Ir [DZ1 to DZ6, DZ7 (500A, 630A)] OFF, 1.5, 3, 3.5, 5, 4.5, 6, 6.5, 8 x Ir [DZ7 (800A, 1000A)]
Time delay, T_s	100 ms / 200 ms
I^2T	ON/ OFF
Protection Mode	ON/ OFF
SC ZSI	OFF, IN, OUT, BOTH (Require ZCOM Module)
Instantaneous	
Current Setting I_i (I_i= x I_n)*	OFF, 6, 12 x In [DZ1 to DZ6, DZ7 (500A)] OFF, 6, 10 x In [DZ7 (630A)] OFF, 6, 8 x In [DZ7 (800A, 1000A)]
Protection Mode	ON/ OFF
Earth Fault	
Current Setting I_g (I_g= x I_n)	0.2, 0.4, 0.5, 0.7
Time delay, T_s	100 ms / 200 ms
Protection Mode	ON/ OFF
EF ZSI	OFF, IN, OUT, BOTH (Require ZCOM Module)
LED Indication	
Power/Release Status LED (Green)	
Blinking @ 500ms (ON/OFF)	Power ON
Steady ON	Pickup
Steady OFF	Power OFF

*Max Break Time : < 50ms for I > Ii (Trip Time Tolerance: 20% + 1 Cycle)

iTRP-4

- Wide range of overload setting from 0.25In
- Adjustable trip class
- I^2T, SI, LI-VI based over load curves
- Neutral overload protection
- Short circuit setting with delay
- Adjustable Instantaneous setting
- Thermal memory defeat
- In-built earth fault protection
- Advanced current based protection function
- Trip and Event records storage capable
- Local LCD display menu navigation using keypad
- MODBUS RTU Communication capable
- Provision for release testing
- Power ON LED
- Common fault indication and diagnostic LED
- Self, Auxiliary and Battery power mode
- True RMS sensing

iTRP-4	
LSING	
Rated Current	25A - 1000A
Frame	DZ1/DZ2/DZ4/DZ6/DZ7
Overload (Phase)	
Current Setting Ir (I_r = x I_n)	0.25 to 1 x I_n (in step of 0.01)
	0.25 to 0.5 x I_n (when Neutral > 100%)
Time delay, T_r (Inverse) at 6I_r	0.5, 1 to 16s (Step of 1)
Curve	I^2T, SI, VI
Thermal memory	OFF, 10 min, 20 min
Alarm pickup	0.5-1 x Ir (Step: 0.01)
Protection Mode	ON/OFF
OverLoad (Neutral)	
Current Setting I_N (I_N = x I_r)	0.5, 0.75, 1, 1.6, 2 (1.6 & 2 is not allowed if Overload > 0.5)
Time delay, T_r (Inverse)	O/L Curve, 0.1-1sec (Step 0.05s)
Protection Mode	ON/OFF
Alarm pickup	0.5 - 1 x I_N (Step: 0.05)
Short Circuit	
Current Setting Isd (Isd = x I_r)	OFF, 1.5, 3, 4.5, 5.5, 6, 7, 8.5, 10 x Ir [DZ1 to DZ6, DZ7 (500A, 630A)] OFF, 1.5, 3, 3.5, 5, 4.5, 6, 6.5, 8 x Ir [DZ7 (800A, 1000A)]
Time delay, Tsd	20, 50 to 400ms (Step 50ms)
I^2T	ON/OFF
ST ZSI	OFF, IN, OUT, BOTH (Require ZSI Module)
Alarm pickup	0.5-1 x I_s (Step: 0.01)
Protection Mode	ON/OFF

Instantaneous Protection	
Current Setting I_i (I_i = x I_n)	1.5 to 12 x I_n (in step of 0.5) upto 500A 1.5 to 10 x I_n (in step of 0.5)630A 1.5 to 8 x I_n (in step of 0.5) 800A,1000A
Protection Mode	ON/OFF
Earth Fault	
Current Setting I_g (I_g = x I_n)	0.1-1 x I_n (Step 0.05)
Time delay, T_g	50 to 500ms (Step 50ms)
I^2T (@1 x in)	ON/OFF
EF ZSI	OFF, IN, OUT, BOTH (Require ZSI Module)
Protection Mode	ON/OFF
Alarm pickup	0.8-1 x I_g (Step: 0.05)
Under-I Protection	
Pickup lupk	0.2-0.85 x Ir (Step: 0.05)
Delay	1-300 s (Step: 1)
Alarm pickup	1.05-1.2 x Pickup (Step: 0.05)
Protection Mode	OFF/Alarm/Alarm & Trip
I-Unbalance Protection	
Pickup	10-90% (Step: 5)
Delay	0.1-60s (Step 0.1)
Alarm pickup	80% of Pickup
Protection Mode	OFF/Alarm/Alarm & Trip
Other Protection	
Internal Temperature	
Mode	OFF
	Alarm (80°)
	Alarm & Trip (105)
LED Indication	
Release Status LED (Red)	
Blinking @ 100ms (ON/OFF)	Trip Mode
Blinking @ 500ms (ON/OFF)	Alarm Mode
Steady On	Pickup Mode
Steady Off	No fault
Power LED (Green)	
Blinking @ 500ms (ON/OFF)	Power ON

iTRP-5

- Wide range of overload setting from 0.25In
- Adjustable trip class
- I^2T, SI, LI-VI based over load curves
- Neutral overload protection
- Short circuit setting with delay
- Adjustable Instantaneous setting
- Thermal memory defeat
- In-built earth fault protection
- Advanced current and voltage based protection function
- Trip and Event records storage capable
- Local LCD display menu navigation using keypad
- Comprehensive current, voltage, power and energy metering
- MODBUS RTU Communication capable
- Provision for release testing
- Power ON LED
- Common fault indication and diagnostic LED
- Self, Auxiliary and Battery power mode
- True RMS sensing

iTRP-5	
LSING	
Rated Current	25A - 1000A
Frame	DZ1/DZ2/DZ4/DZ6/DZ7
(OverLoad (Phase), Overload (Neutral), Short Circuit, Instantaneous Protection, Earth Fault, Under-I Protection, I-Unbalance Protection, Internal Temperature Protections refer iTRP-4.)	
Voltage Protection	
Under-V Protection	
Mode	0: OFF
	1: Pickup Alarm
	2. Alarm & Trip
Pickup	0.4-0.95 x Un (Step 0.01)
Delay	0.1-60s (Step 0.1s)
Over-V Protection	
Mode	0: OFF
	1: Pickup Alarm
	2: Alarm & Trip
Pickup	1.05-1.5 x Un (Step 0.01)
Delay	0.1-60s (Step 0.1s)
V-Unbalance Protection	
Mode	0: OFF
	1: Pickup Alarm
	2: Alarm & Trip
Pickup	5-25% (Step: 1)
Delay	0.5-60s (Step 0.5s)
Residual Protection	
Mode	0: OFF
	1: Pickup Alarm
	2: Alarm & Trip
Pickup	5-40v (Step 5v)
Delay	0.5-60s (Step 0.5s)

Frequency Protection	
Under-freq Protection	
Mode	0: OFF
	1: Pickup Alarm
	2: Alarm & Trip
Pickup	50: 45 to 49.9, 60: 54 to 59.9 (Step 0.1 Hz)
Delay	0.1-30s (Step 0.1)
Over-Freq Protection	
Mode	0. OFF
	1: Pickup Alarm
	2: Alarm & Trip
Pickup	50: 50.1 to 55, 60: 60.1 to 66 (Step 0.1 Hz)
Delay	0.1-30s (Steps: 0.1)
Power Protection	
Rev Power Protection	
Mode	0: OFF
	1: Pickup Alarm
	2: Alarm & Trip
Pickup	0.05 To 0.40 Pn (steps 0.01Pn)
Delay	0.5 To 60 s (steps 0.5s)
Over-Freq Protection	
Mode	0: OFF
	1: Pre-trip/Pickup Alarm
	2: Alarm & Trip
Pickup	0.50 To 0.99 Pf (steps 0.01Pf)
Delay	100 To 500ms (steps 50ms)
Lag Power Factor Protection	
Mode	0: OFF
	1: Pre-trip/Pickup Alarm
	2: Alarm & Trip
Pickup	0.50 To0.99 Pf (steps 0.01Pf)
Delay	100 To 500ms (steps 50ms)
MD Active Protection	
Mode	0: OFF
	1. Pickup Alarm
	2: Alarm & Trip
Pickup	0: Deliver
	1: Receive
Delay	0.4 to 1 (steps 0.01) (Rated Power)
MD Reactive Protection	
Mode	0: OFF
	1: Pretrip/Pickup Alarm
	2: Alarm & Trip
Pickup	0: Deliver
	1: Receive
Delay	0.4 to 1 (steps 0.01) (Rated Power)
MD Apparent Protection	
Mode	0: OFF
	1: Pickup Alarm
	2: Alarm & Trip
Pickup	0.4 to 1 (steps 0.01) (Rated Power)

Other Protection	
Ph Sequence Protection	
	0. OFF
Mode	1: Pickup Alarm
	2: Alarm & Trip
Pickup	0.1s To 5 s (steps 0.1s)
THD I Protection	
Mode	0: OFF
	1: Pickup Alarm
	2: Alarm & Trip
Pickup	5 To50% (steps 1)
Delay	5 To 15s (steps 1s)
THD V Protection	
Mode	0: OFF
	1: Pickup Alarm
	2: Alarm & Trip
Pickup	5 To 50% (steps 1)
Delay	5s To 15s (steps 1s)
Internal Temp	
Mode	0: OFF
	1: Alarm (80 degree)
	2: Alarm & Trip (105 degree) (30 secs delay)
LED Indication	
Release Status LED (Red)	
Blinking @ 100ms (ON/OFF)	Trip Mode
Blinking @ 500ms (ON/OFF)	Alarm Mode
Steady On	Pickup Mode
Steady Off	No fault
Power LED (Green)	
Blinking @ 500ms (ON/OFF)	Power ON

All electronic releases provide in-built Instantaneous-Override protection fixed @ 1.2 to 1.3 x Ii maximum setting.

iTRP-M3

- Wide range of overload setting from 0.25In
- Adjustable trip class 10, 20, 30
- Lock Rotor protection with adjustable delay
- Short circuit protection with no delay
- Instantaneous protection with fixed threshold
- In-built earth fault protection
- Integrated contactor control relay
- Provision for release testing
- Separate LED for every fault indication

i TRP-M3	
LRISUG	
Rated Current	25A - 1000A
Frame	DZ1/DZ2/DZ4/DZ6/DZ7
Over Load	
Current Setting Ir (Ir = x In)	0.25 to 1 x In (in step of 0.05)
Trip Class	10, 20, 30 @ 7.2Ir (Startup Time 7s, 14s, 21s respectively)
	TM (< 20 mins)
TM (< 20 mins)	Always Active
Protection Mode	ON/OFF
Lock Rotor	
Current Setting in (ILR = x Ir)	3, 5, 6, 8 x Ir (Threshold - Avg of 3phases)
	3, 5, 6, 8 x In (when O/L is OFF)
Time delay, tLR (seconds)	0.5, 1, 2, 3s (Active after Startup time as selected in Overload)
Protection Mode	ON/OFF
Instantaneous	
Current Setting Ii(Ii=x In)	12 x In [DZ1 to DZ6, DZ7 (500A, 630A)] 10 x In [DZ7 (800A,1000A)]
Delay	Max 40ms
Short Circuit	
Current Setting Is (Is = x Ir)	OFF, 5, 7, 8, 10 x Ir [DZ1 to DZ6, DZ7(500A, 630A)]
	OFF, 5, 6, 7, 8 x Ir [DZ7(800A, 1000A)]
Delay	<60ms
Protection Mode	ON/OFF
Unbalance	
Current Setting Iunbal	30% of I_{avg}
Time delay, tIunbal (seconds)	0.7sec at startup, 4sec in steady state
Protection Mode	ON/OFF
Earth Fault	
Current Setting Ig (Ig = In)	0.1, 0.2, 0.4, 0.5 x In
Time delay, Ts	100ms/200ms
Protection Mode	ON/OFF

LED Indication	
LED (GREEN) - 1 No	
Power	Blinking for power indication with rate as follows:
	- one second (0.5S ON & 0.5S OFF) - If Inst Override is On
	- four second (2S ON & 2S OFF) - If Inst Override is Off.
Fault	Steady above pickup for Overload and STS
LED (Red) - 6 No	
Fault Indication- R	Steady Glow after pressing Switch SW1, once the breaker
Fault Indication- SC	has tripped. LED glow, in aux power, determines the Fault
Fault Indication- Unbalance	in which the breaker has tripped. Auto clear once the
Fault Indication- INST	breaker closes and current flows or Query pressed for
Fault Indication- EF	more than 10sec
LED Indication	
Overload/Phase Unbalance / Locked Rotor	Relay picks up 400ms before the fault initiation command.
	Reset time for relay is 3min.
	Relay is rated for 0.5A, 230V ac.

Accessories

Accessories	DZ0	DZ1	DZ2	DZ4	DZ6	DZ7
Internal Accessories						
Auxiliary Contact Trip Alarm Contact	✓	✓	✓	✓	✓	✓
Shunt Release AC	✓	✓	✓	✓	✓	✓
Shunt Release DC	✓	✓	✓	✓	✓	✓
Under Voltage Release AC	✓	✓	✓	✓	✓	✓
Under Voltage Release DC	✓	✓	✓	✓	✓	✓
External Accessories						
Rotary Operating Mechanism - Direct	✓	✓	✓	✓	✓	✓
Rotary Operating Mechanism - Extended	✓	✓	✓	✓	✓	✓
Keylocks	✓	✓	✓	✓	✓	✓
Plug-in Module	×	✓	✓	✓	✓	✓
Draw Out Module	×	×	×	✓	✓	✓
Electrical Operating Mechanism	×	✓	✓	✓	✓	✓
Phase Barrier	✓	✓	✓	✓	✓	✓
Mechanical Interlock Kit						
Front Slider	×	✓	✓	✓	×	×
Cable Base Plate Type	×	✓	✓	✓	✓	×
Rear Base Plate MIL	×	×	×	✓	✓	✓
Terminations						
Terminals with Spreaders	✓	✓	✓	✓	✓	✓
Terminals with Rear Terminals	×	✓	✓	✓	✓	✓
Terminals with Box Clamps	✓	✓	✓	✓	✓	×
Short Terminal shroud	✓	✓	✓	✓	✓	✓
Long Terminal shroud	✓	✓	✓	✓	✓	✓
Modules for iTRP-3C / iTRP-4 / iTRP-5						
Communication Module	×	✓	✓	✓	✓	✓
Zone Selective Interlocking Module	×	✓	✓	✓	✓	✓
Z-COM Module (ZSI+COM)	×	✓	✓	✓	✓	✓
Temperature Module	×	✓	✓	✓	✓	✓
Programmable Relay Module	×	✓	✓	✓	✓	✓
External Neutral CTs	×	✓	✓	✓	✓	✓
Electronic Test Kit	×	✓	✓	✓	✓	✓

Internal Accessories

Auxiliary Contact
Trip Alarm Contact
Shunt / Under Voltage Release

DZ MCCBs offers wide range of snap fit accessories. There are up to 6 cavities for variety of accessories, this allow customers to use all possible combinations and provide maximum flexibility.

There is no need to open main cover and no live parts are accessed, during installation.

DZ0

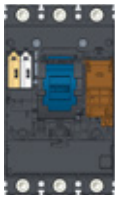
DZ1/DZ2

DZ4

DZ6/DZ7

Internal Accessory	Contacts / Supply Voltage	MCCB	Cavity (Right / Left)
Auxiliary Contact	1 C/O	DZ0	Right
		DZ1	Left
		DZ2	Left
		DZ4	Left
		DZ6	Left
		DZ7	Left
Trip Alarm Contact	1 C/O	DZ0	Right
		DZ1	Left
		DZ2	Left
		DZ4	Right
		DZ6	Left
		DZ7	Left
Shunt Release	12V DC 24V DC 48V DC 110V DC 220V DC 24V AC 48V AC 110V AC 240V AC 415V AC	DZ0	Left
		DZ1	Right
		DZ2	Right
		DZ4	Right
		DZ6	Right
		DZ7	Right
Under Voltage Release	12V DC 24V DC 48V DC 110V DC 220V DC 24V AC 48V AC 110V AC 240V AC 415V AC	DZ0	Left
		DZ1	Right
		DZ2	Right
		DZ4	Right
		DZ6	Right
		DZ7	Right

Auxiliary Contacts & Trip Alarm Contacts

DZ MCCB range comes with two sizes of changeover contacts covering the entire range from 16 A to 1000 A. These contacts enable remote monitoring of MCCB status, including ON, OFF, and Trip. They are suitable for indications, electrical locking, relaying, and more.

Salient Feature:

- Offered in 3 sizes encompassing the entire 16 A to 1000 A range
- Sturdy installation, mountable using snap-fits and easily removable.
- 100% of the MCCB's rated mechanical endurance
- Choice of 2-Aux contacts from 16 A to 160 A, & 3-Aux contacts from 250 A to 1000 A
- Identical changeover switches for both Aux and TAC applications

Specifications

Product		**Auxiliary Contact / Trip Alarm Contact**			
Versions	Size 0	Size 1		Size 2	
Supply type	AC	AC	DC	AC	DC
Compatible frames	DZ0	DZ1, DZ2, DZ4		DZ6, DZ7	
Rated operating voltage, Un (V)	240	240	220, 110, 60, 24, 12	240	220, 110, 60, 24, 12
Rated operational current In (A)	6	6	0.25, 0.5, 1, 5, 6	6	0.25, 0.5, 1, 5, 6
Utilization category	AC 14	AC 14	DC 12	AC 14	DC 12
Mounting	Screw			Snap fit	
Rated frequency (Hz)	50/60				
Rated Duty	Continuous				
Standard	IEC 60947-5				
Termination	Pre wired (0.5 mm²) 500mm length				
Electrical life	100% of MCCB Mechanical life				
Mechanical life	100% of MCCB Mechanical life				

Shunt Release

The Shunt release enables tripping or cutting off the supply at the MCCB through an electrical remote command. If the operational voltage falls within a range of 70% to 110% of its rated operational voltage, the shunt release will trip the MCCB. It mechanically locks the main mechanism of the MCCB, making it impossible to switch ON the MCCB until control voltage is applied. This feature prevents closing the MCCB with the shunt release energized. There is no tripping memory when the MCCB is in the OFF condition. If the MCCB is in the OFF condition and the shunt release receives a tripping signal in the form of rated voltage during maintenance, the next ON operation will not trip; the MCCB will be switched ON. When inserting an energized shunt release in the MCCB, if the MCCB is switched ON or in the closed condition, the Shunt facilitates tripping of the main mechanism to open the MCCB before full insertion.

Key Feature:

- Shunt release coils are continuously rated coils
- Low burden on the control circuit system due to low VA
- Finger-proof termination with IP20 protection
- Offered in only 3 sizes covering the entire range of 16 A to 1000 A
- Sturdy fitment and mounting using screws
- Endurance: 100% of the MCCB's rated mechanical endurance
- Options of 2-UV or 2-Shunt or 1-UV and 1-Shunt from 250 A onwards till 1000 A

Product	SHUNT RELEASE		
Versions	Size 0	Size 1	Size 2
Supply type	AC	AC/DC	AC/DC
Compatible frames	DZ0	DZ1, DZ2, DZ4	DZ6, DZ7
Rated operating voltage, un (V)	110, 240, 415	AC - 24, 48, 110, 240, 415 DC - 12, 24, 48, 110, 220	
Mounting	Screw		Snap fit & Screw
Rated frequency (Hz)	50/60		
Response Time (ms)	25		
Standard	IEC 60947-2		
Operating range,			
Rated duty	Short Rated, Continuous at 240	Continuous	
Shunt trip	(0.7 to 1.1) Un		
Connection	Pre-wired (0.5 mm²)		
Endurance	30% of breaker mechanical endurance		

Shunt Release			
Voltage 50/60 Hz	Power Consumption in short time (VA)		
	DZ0 (Size 0)	DZ1/ DZ2/ DZ4 (Size 1)	DZ6/DZ7 (Size 2)
415 AC	5	5	5
240 AC	5	5	5
110 AC	5	5	5
48 AC	5	5	5
24 AC	5	5	5

Under Voltage Release

The Under Voltage release facilitates tripping or cut-off of supply instantaneously, if the operational voltage falls to a value between 35% to 70% of its rated operational voltages.

Under-voltage release mechanically locked the main mechanism of MCCB and makes it impossible to switching ON the MCCB until it is no voltage or under voltage in control circuit. This is facilitating through feature which do not allow to close the MCCB with under-voltage release de-energised.

There is no tripping memory in OFF condition of MCCB. If MCCB is in OFF condition and under-voltage release got tripping signal in form of under voltage during maintenance, then next ON operation will not be tripped, MCCB will get switched ON.

While inserting de-energised under-voltage release in MCCB, if MCCB is switched ON or in close condition then UV facilitate tripping of main mechanism to open the MCCB before full insertion.

Salient features

- Under-voltage coils are continuously rated coils
- Low burden on the control circuit system due to low VA
- Finger-proof termination with IP20 protection
- Offered in only 3 sizes covering the entire range of 16 A to 800 A
- Sturdy fitment and mounting using screws
- Endurance: 100% of the MCCB's rated mechanical endurance
- Options of 2-UV or 2-Shunt or 1-UV and 1-Shunt from 250 A onwards till 800 A

Specifications

Product	Under Voltage release		
Versions	Size 0	Size 1	Size 2
Supply type	AC	AC	AC
Compatible frames	Frame 0	Frame 1, 2, 3 & 4	Frame 5, 6, 7
Rated operating voltage, un (V)	110, 240, 415	24, 48, 110, 240, 415	
Mounting	Screw		Snap fit & Screw
Rated frequency (Hz)	50/60		
Response Time (ms)	25		
Standard	IEC 60947-2		
Operating range,			
UV pick up	(0.85 to 1.1) Un		
UV drop off	(0.35 to 0.7) Un		
Rated duty	Continuous		
Connection	Pre-wired (0.5 mm²)		
Endurance	30% of breaker mechanical endurance		
Mounting	Screw		Snap fit & Screw

Under Voltage Release			
Voltage 50/60 Hz	Power Consumption in short time (VA)		
	DZ0 (Size 0)	DZ1/ DZ2/ DZ4 (Size 1)	DZ6/DZ7 (Size 2)
415 AC	5	5	5
240 AC	5	5	5
110 AC	5	5	5
48 AC	5	5	5
24 AC	5	5	5

External Accessories

Rotary Operating Mechanism (ROM)

Rotary Operating Mechanism (ROM) used in dsine DZ is available in two variations: Direct and Extended versions.

Direct ROM: The ROM is directly attached to the operating mechanism of the MCCB and is used to manually operate the breaker.

Extended ROM: The ROM is equipped with extensions or additional components, possibly for specific applications or installations where a longer reach or different operational setup is required.

Salient features

- Clear indication for ON/OFF/TRIP status
- Direct access to the "Push to Trip" button
- Suitable for use in any quadrant
- Door interlock feature when in ON mode, with option to override
- Door interlock feature when in OFF mode, with padlock capability
- Supports three padlocks with diameters ranging from 5mm to 8mm
- Door sensing functionality
- Mechanical interlock compatibility with various keylock types such as Ronis, Kirk, Allen-Bradley, Fortress, Castle, etc.
- Ingress Protection (IP) ratings of IP42 and IP54 for the direct and extended versions respectively

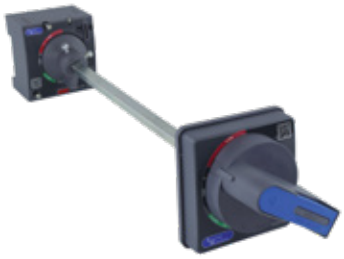

Key Lock

For mechanical interlocking through extended rotary operating mechanism, a panel mounted key lock is available. The selection of the key lock as per the table:

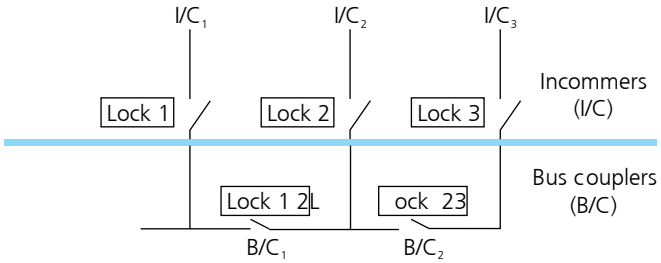

Selection

I/C or B/C	Key Lock
2 I/C	Any 1 type of lock for both MCCBs
2 I/C and 1 B/C	Lock 1 and Lock 2 for I/C and Lock 12 for B/C
3 I/C and 2 B/C	Locks 1, 2, 3 for I/Cs and Locks 12, 23 for B/Cs

Type of lock	Exclusively operable by key nos.
1	1
2	2
3	3
12	1, 2 & 12
23	2, 3 & 23

Plug-in Module

MCCBs with "Plug in" module is used in applications which demand higher levels of service continuity and a fast replacement.

In case of a fault in an electrical system, MCCB clears the faults efficiently and effectively. In sites requiring higher level of

service continuity such as Hospitals and powerplants, the site demands replacement of MCCB immediately. In such cases, MCCB with plug in base can be safely removed from the system without removing the power connections or terminations and can be replaced with the new MCCB.

Once MCCB is removed from the plug in base, the system also offers complete isolation from the supply and hence, it enhances the safety of personnel working on down stream feeders.

Salient features

- Inbuilt safety interlock a mechanism which prevents plug in/out of the MCCB when the MCCB is in ON condition to prevent connecting or disconnecting the power circuits under load conditions.
- Suitable for different types of terminations i.e., Front terminations, Spreader links, Box Clamps and Rear terminations in line with MCCB terminations.
- True indication of the status of MCCB through potential free auxiliary switch - in service position.
- DZ7 Plug-in comes with a driving mechanism for ergonomic operation, and it also has a push button position locking mechanism improving user experience.
- Ingress Protection (IP)
  - IP20 - MCCB plug out condition.
  - IP40 - MCCB plug in condition.

Constructional details

The new dsine DZ MCCB Plug-in module consist of following accessory kits:

- Plug in base, with terminations, is the fixed part and can be panel mounted
- Conversion kit, consisting of moving parts, which is mounted on the MCCB.

Plug in base is an insulated thermoset component, which has provisions to accommodate socket assemblies, auxiliary switch assembly, IP covers, finger shields, terminals, mounting plates, and shields. It also includes a slot for MIL (Mechanical interlock) actuation. DZ7 Plug-in has side plate assemblies having position lock mechanism and driving mechanism.

Finger shield and IP covers are inserted in the Plug in base at the respective positions of all phases to ensure Ingress Protection (IP). The plug in base also has provision to accommodate all types of termination like Front terminations, Spreader links, Box Clamp and Rear terminations in line with the MCCB.

Conversion kit contains a rear plate assembly which has safety lock mechanism. Rear plate is fastened to the rear side of MCCB by two screws (4 screws in case of DZ7 Plug-in). Safety lock mechanism is used for arresting the movement of MCCB to or from the connected position when the breaker is in ON condition.

The mechanism consists of a safety lock which is connected to the rear plate by using a pin. It is spring loaded and is capable of locking itself against a corresponding surface in the plug-in base when the MCCB is switched ON. The mechanism prevents the insertion of MCCB which if it is in ON condition.

The Kit also includes contact stud plugs which are fastened to the MCCB terminals and make electric contact with the Plug in base terminals through socket assemblies (Jaw assembly in case of DZ7 Plug-in).

Handle is inserted to the terminal side of the MCCB which ensures easy removal of the breaker from Plug in base in OFF condition. In DZ7 Plug-in, metal handle rods are provided for ergonomic loading and unloading the moving kit into the fixed kit. The driving mechanism is then used to plug-in the MCCB. DZ7 Plug-in also comes with shrouds for MCCB to meet IP requirements.

Specifications

Versions		Plug-in DZ1	Plug-in DZ2	Plug-in DZ4	Plug-in DZ6	Plug-in DZ7
Maximum Rated current(A)	Electronic Release	144 A	160	250	360	720
	Thermal Magnetic Release	144 A		225	360	720
Max Operating Voltage Ue (Vac)		500	690	690	690	690
Rated frequency (Hz)		50/60				
Dimension (mm) W x H x D [Without MCCB]	3P	75 x 171 x 60		105 x 220 x 70	120 x 282 x 100	268 x 369 x 194
	4P	100 x 171 x 60		140 x 220 x 70	160 x 282 x 100	328 x 369 x 194
Dimension (mm) W x H x D [With MCCB]	3P	75 x 171 x 60	75 x 171 x 135	105 x 220 x 160	120 x 282 x 155	268 x 369 x 204
	4P	100 x 171 x 60	100 x 171 x 135	140 x 220 x 160	160 x 282 x 155	328 x 369 x 204
Short time withstand, Icw (kA) for Plug-in contacts		25 kA for 30 ms		38 kA for 40 ms	50 kA for 50 ms	50 kA for 50 ms
Insulation Voltage Ui (Vac)		800	1000	1000	1000	1000
Impulse Voltage Uimp (kV)		8				
Safety feature		Safety Interlock				
		Aux. Indication				
Mechanical Life		200 operations				
Ingress Protection		IP 20 (Without breaker)				
		IP 40 (With breaker)				
Mounting orientation		Vertical / Horizontal				
External Accessory Suitability	Direct ROM	Yes	Yes	Yes	Yes	Yes
	Extended ROM	Yes	Yes	Yes	Yes	Yes
	Motor Operator	Yes	Yes	Yes	Yes	Yes
	Spreader	Yes	Yes	Yes	Yes	Yes
	Rear Terminals	Yes	Yes	Yes	Yes	Yes
	Box Clamps	Yes	Yes	Yes	Yes	No
	MIL	Yes (Cable and Front Slider type)		Yes (Cable, Front Slider and Baseplate Type)	Yes (Cable and BaseplateType)	NO
	Keylock	Yes (through ROM)				

Draw-out Module

Draw-out MCCBs are used in applications which demand higher levels of service continuity. In case the MCCB develops a fault and needs replacement, MCCB can be safely removed from the draw-out system without removing the power connections and replaced with new MCCB.

Draw-out module facilitates all other electrical accessories like UV, shunt, EOM and release can be wired through secondary isolating contacts (SIC).

In test position, accessories and wiring schemes can be tested without removing the MCCB from the cradle.

In disconnected position, it offers complete isolation from the incoming supply and hence enhances the safety of operator or user.

Salient features

- It offers Locking in three distinct Positions:
  - **Disconnect:** the device is disconnected completely, both power and auxiliary connections are disconnected and can be removed from fixed base safely
  - **Test:** the power circuit is disconnected, and device is ready to check auxiliary operations
  - **Connect:** the power circuit is connected

All these positions are provided with electrical and mechanical indications.

- Secondary Isolating Contacts (SIC) are automatic and side mounted.
- Safety lock along with ROM or EOM, ensures that the draw-in or draw-out of breaker is possible only in OFF condition.
- MCCB cannot be switched ON when the racking handle is inserted.
- 'Disengage latch' reliably holds the breaker with cradle in disconnected position, to ensure operator safety.
- Pad lock has been provided to prevent unauthorised draw-in or draw-out operation. Termination region on draw-out base (cradle) is same as that of MCCB, hence termination capacity and termination accessories like box clamp, rear terminal and spreader links are same and uses same breaker accessories like phase barrier, shroud, and mechanical interlock.

Constructional features:

The new Dsine DZ MCCB Draw-out modules consists of three basic parts:

- Draw-out fixed part, can be either panel mounted, or rail mounted (Only Panel Mounted for DZ7 Draw-out)
- Conversion kit, consisting of moving parts, which is attached to the standard circuit breaker
- Racking handle

Draw-out fixed part has Plug-in base, which has provisions to accommodate socket assemblies or jaw assemblies, IP covers, finger shields and terminals. Side plate assemblies of Draw-out module has racking mechanism, Position lock mechanism, Pad locking mechanism, cradle secondary isolating contacts (SIC) and electrical indication. It also has a panel kit facilitating closed door operation and giving mechanical indication.

These side plate assemblies are assembled with Plug-in base.

Conversion kit contains two rear plate assemblies & special ROM for safety features.

These rear plate assemblies are to be fastened to the rear side of MCCB by means of four screws by user.

Power electrical contact plugs are fastened to the MCCB terminals and make electric contact with the cradle terminals through socket assemblies.

The termination region of MCCB ensures IP40 from front fascia to end user in case MCCB is removed from fixed base.

Rotary operating mechanism is to be attached to the top of MCCB with 4 mounting screws. It has all the safety feature to ensures the rack-in/out of the breaker only in OFF condition.

*We can provide all the feature of rotary handles in draw-out also such as door sensor, door interlock, etc.

Specifications

Versions		Draw-out DZ4	Draw-out DZ6	Draw-out DZ7
Maximum Rated current(A)	Electronic Release	250	360	720
	Thermal Magnetic Release	225	360	720
Max Operating Voltage Ue (Vac)		690	690	690
Rated frequency (Hz)		50/60		
Dimension (mm), W x H x D [Without MCCB]	3P	228 x 220 x 213	243 x 282 x 216.3	304 x 338 x 248
	4P	263 x 220 x 213	283 x 282 x 216.3	364 x 338 x 248
Dimension (mm), W x H x D [With MCCB]	3P	228 x 220 x 224.3	243 x 282 x 229.2	304 x 338 x 256
	4P	263 x 220 x 224.3	283 x 282 x 229.2	364 x 338 x 256
Short time withstand, Icw (kA) for Plug-in contacts		38 kA for 40 ms	50 kA for 50 ms	50 kA for 50 ms
Insulation Voltage Ui (Vac)		1000	1000	1000
Impulse Voltage Uimp (kV)		8		
Safety feature		ROM Safety Interlock		
		Padlock		
		Disengage Latch		
		Rack In Handle Safety Interlock		
		3 position push button lock		
		Mechanical Indication		
		Electrical Indication		
		NA		Safety Shutter for plug in contacts
Mechanical Life		200 operations		
Ingress Protection		IP 20 (Without breaker)		
		IP 40 (With breaker)		
Mounting orientation		Vertical / Horizontal		
External Accessory Suitability	Direct ROM	Yes	Yes	Yes
	Extended ROM	No	No	No
	Motor Operator	Yes*	Yes*	Yes*
	MIL	Yes (Cable and Base Plate type)	Yes (Cable and Base Plate type)	NO
	Spreader	Yes	Yes	Yes
	Rear Terminals	Yes	Yes	Yes
	Box Clamps	Yes	Yes	No
	Keylock	Yes (through ROM)		

* With Drawout Motor Operator Interlock

Electrical Operating Mechanism

Motor Operator is a premium external accessory to Moulded Case Circuit Breaker (MCCB). Motor Operators are widely used for remote switching and auto source changeover schemes. Motor operators find applications in industry segment, infrastructure and building segment with critical installation areas like hospitals.

Motor operator address MCCB needs of Reliable auto source switching, process industries,

Infrastructure application, optimized energy cost and digital connectivity.

Salient Features

- Compact motor operator with size 87 x 75 x 100 mm (Hx WxD) in DZ1 & DZ2.
- Operates within a wide voltage band (150 VAC – 270 VAC)
- Features an auto pop-up type padlock. Padlocking is possible in both ON and OFF state of MCCB.
- Selector Switch with three distinct modes of operation as follows:

  Auto mode - Unit can operate electrically. Manual operations and padlocking are disabled

  Manual Mode - Unit can be operated manually. Electrical operations and padlocking are disabled.

  Lock Mode - Unit cannot be operated. Auto and Manual modes are disabled. Padlocking is possible.
- Ingress protection complying IP40
- 'Single hand hinge-out' feature with retention snaps for easy access to the internal accessories of MCCB like UV/SR & AUX/TAC. No need to un-mount EOM for mounting / replacing internal accessories.
- Ergonomic supplementary handle for easy manual operations.
- Endurance life up to 100% mechanical life of MCCB operations for reliable switching.
- Easy access to MCCB termination. No need to un-mount EOM for assembly and maintenance of MCCB termination
- Flag indication of ON/OFF & charge/Discharge state Common design for 3P and 4P
- Easy access to protection setting on MCCB.
- True indication for ON/OFF & Trip.
- Electrical indication of charge/discharge state through Lamp.
- Electrical indication of Auto/Manual mode through Lamp.
- Voltage error indicator LED at MO front facia for voltage error <150 or >270 V in case of DZ6 & DZ7 EOMs

Specifications

Specification	DZ1	DZ2	DZ6	DZ7
Operating voltage (V AC)	240 V AC/110 V DC	240 V AC/110 V DC	240 V AC/110 V DC	240 V AC/110 V DC
Operating voltage (%)	75-110 %	75-110 %	75-110 %	75-110 %
Closing time (ms)	<80	<80	<80	<80
Opening time(ms)	<100	<100	<600	<700
Power consumption (VA)	500	500	500	500
Life/no of operation	25000	30000	20000	20000
IP Protection	IP40	IP40	IP40	IP40
Operating frequency	2/min	2/min	1/min	1/min
Min control pulse time(ms)	50-150	150	50	50

Mechanical Interlock (MIL)

In source change-over systems, Mechanical Interlock (MIL) prevents connection to both sources at the same time.

When two MCCBs are working in parallel, there may be a requirement to interlock two MCCBs mechanically so that when one is being turned ON, the other remains in OFF position, so that only one MCCB may be closed at a time.

MIL also finds its application in ASTS for additional safety, especially in an environment having high vibrations. MILs are used along with Electrical interlock.

The new dsine DZ has three versions of Mechanical Interlock depending upon their philosophy of interlocking.

Mechanical Interlocking kit range	DZ1	DZ2	DZ4	DZ6	DZ7
Front Slider	✓	✓	✓	-	-
Rear Base Plate	-	-	✓	✓	✓
Cable Base Plate	✓	✓	-	✓	-

1) Mechanical Interlock - Front Slider

Two MCCBs installed side by side can be interlocked using Front MIL. Interlocking is carried out by means of front slider kit which prevents the unintentional operation of interlocked MCCB through mechanical feedback. It is applicable from DZ1 to DZ4 having the possible combinations:

MCCB INTERLOCKING MATRIX - Front Slider

MCCB	DZ1	DZ2	DZ4
DZ1	✓		
DZ2		✓	✓
DZ4		✓	✓

2) Mechanical Interlock - Rear Base Plate

Two MCCBs can be interlocked using Rear Base plate MIL installed side by side on base plate. Interlocking is carried out by means of mechanism located behind the base plate of installed MCCBs. This gives flexibility to operator or user to access the front controls and status indication of MCCB. It is applicable for the DZ6 range with interlocking provision as follows:

MCCB	DZ4	DZ6	DZ7
DZ4	✓	✓	
DZ6		✓	
DZ7			✓

Constructional Detail

MIL - Rear base plate is suitable for the fixed, plug-in and draw-out versions of MCCBs, both 3P and 4P. It consists of a base plate, two operating lever mechanisms and MCCB specific mounting plates with actuators. Operating lever mechanisms are assembled to the base plate with suitable actuators at user end. Suitable mounting plates are mounted to the base plate upon which MCCBs are mounted. A complete base plate assembly can be installed horizontally or vertically on the mounting plate of the panel.

Some of the salient features are

- Min. 26 mm clearance between 3P and 4P with spreaders and Rear termination with link to the base plate
- Common design for 3P and 4P
- Suitable for all types of terminations applicable to basic MCCB
- Suitable for withdrawable Plug-in and Draw-out modules, with all type of MCCB terminations applicable
- Suitable for MCCBs having ROMs and EOMs
- Suitable for horizontal or vertical mounting orientations

3) Mechanical Interlock - Rear Base Plate with cable

Two MCCBs can be interlocked using this Rear Base plate MIL with cable installed even 5m apart. Interlocking is carried out by means of mechanism located behind the base plate of installed MCCBs and feedback cable. This gives flexibility to the operator or user to access the front controls and status in direction of MCCB and cable gives flexibility to installed at any distance up to 5m* It is applicable from DZ1 to DZ6 MCCBs.

***Note:** Max. Cable length is 5m

MCCB INTERLOCKING MATRIX

MCCB	DZ1	DZ2	DZ4	DZ6
DZ1	✓			
DZ2		✓	✓	✓
DZ4		✓	✓	✓
DZ6		✓	✓	✓

Constructional Detail:

MIL - Rear base plate with cable is suitable for the fixed, plug-in and draw-out version, both 3P and 4P. It consists of two base plates, with operating lever mechanisms, actuators and cable. The cable assembled between two operating lever mechanisms facilitates interlocking between two MCCBs. The MCCBs are mounted on the respective base plates and then cable is calibrated for interlocking. The position and orientation of two base plate assemblies can be flexibly installed away from each other in the panel.

Some of the salient features are:

- Min. 26 mm clearance between 3P and 4P with spreaders and Rear termination with link to the base plate
- Possible to interlock different MCCB frames
- Common design for 3P and 4P
- Suitable for all types of terminations applicable to basic MCCB
- Suitable for withdrawable Plug-in and Draw-out modules, with all type of MCCB terminations applicable
- Suitable for MCCBs having ROMs and EOMs
- Suitable for horizontal or vertical mounting orientations
- Cables are provided in the length of 1m, 3m and 5m depending on requirements.

Maintenance Guidelines:

- Minimum cable bending radius of 80mm to be maintained.
- Cables should not be looped.
- Cable should not be disturbed after calibration.
- Cable should be supported appropriately at required locations to prevent sagging.
- Re-calibration and verification to be done every 30 days to ensure there is no abuse with cable calibration.
- Calibration should be done by authorised service engineers only.

BASE PLATE SELECTION

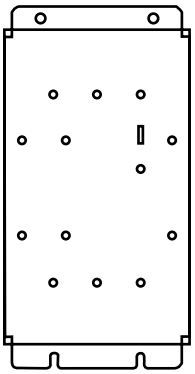

BASEPLATE UNSUITABLE
FOR REAR TERMINATION

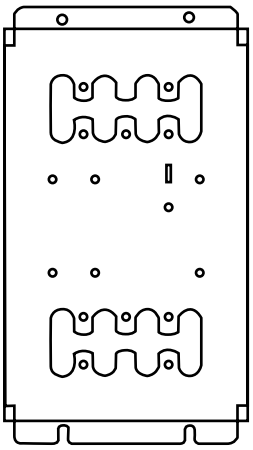

BASEPLATE SUITABLE
FOR ALL TYPE OF TERMINATION

OVERALL DIMENSIONS

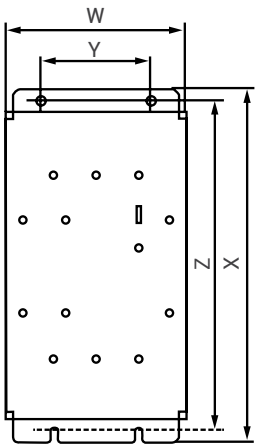

BASEPLATE A

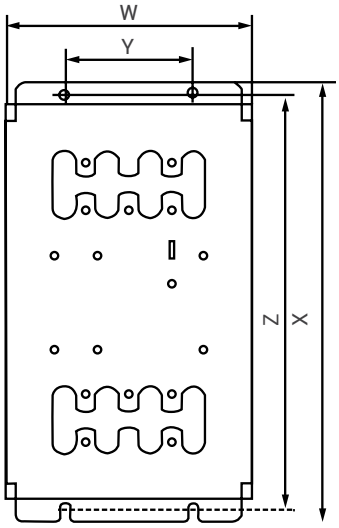

BASEPLATE B

	Baseplate A			Baseplate A		
	DZ1/2	DZ4	DZ6	DZ1/2	DZ4	DZ6
W	100	160	170	164	213	230
X	222	264	344	282	349	412
Y	70	94	104	75	105	120
Z	204	242	312	264	327	390

CABLE SELECTION MATRIX

		DZ1		DZ2		DZ4		DZ6	
		A	B	A	B	A	B	A	B
DZ1	A	L	L						
	B		M						
DZ2	A			L	L	L	M	L	M
	B				M	L	M	M	H
DZ4	A					L	M	L	M
	B						H	M	H
DZ6	A							M	H
	B								H

All types of cables : L, M and H come in the lengths of 1m, 3m and 5m.

Terminations

			DZ0	DZ1	DZ2	DZ4	DZ6	DZ7
	Box Clamp	Flexible cable	2mm² to 35mm²	2.5mm² to 70mm²	2.5mm² to 70mm²	50mm² to 150mm²	120mm² to 240mm²	-
		Rigid Cable	2mm² to 35mm²	2.5mm² to 95mm²	2.5mm² to 95mm²	50mm² to 185mm²	120mm² to 300mm²	
		Tightening Torque	2.5 to 4 Nm	Max 6 Nm	Max 6 Nm	Max 15 Nm	Max 20 Nm	
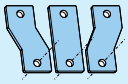	**Spreader Links**	Cable	25mm² to 70mm²	-	-	25mm to 35mm wide	25mm to 50mm wide	2x150mm² to 2x300mm²
		Link	(16 to 25)mm wide X (3 to 5) mm thick	-	-			(30 to 50)mm wide X (8 to 16) mm thick
		Tightening Torque	2.5 to 6 Nm	Max 6 Nm	Max 6 Nm	Max 15 Nm	Max 25 Nm	Max 70 Nm
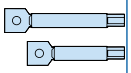	**Rear Terminal**	Cable	-	-	-	50mm² to 185mm²	120mm² to 300mm²	120mm² to 240mm²
		Link	-	-	-	20mm wide X (4 to 10) mm thick	30mm wide X (4 to 10) mm thick	30mm wide X (4 to 10) mm thick
		Tightening Torque	-	Max 6 Nm	Max 6 Nm	Max 15 Nm	Max 20 Nm	Max 25 Nm
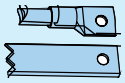	**Direct Terminal**	Cable	2.5mm² to 35mm²	2.5mm² to 50mm²	2.5mm² to 35mm²	Max 25mm wide	(25 to 30)mm wide X (4 to 10) mm thick	-
		Link	(11 to 17)mm wide X (2 to 5) mm thick	(11 to 16)mm wide X (2 to 5) mm thick	(11 to 16)mm wide X (2 to 5) mm thick			(30 to 50)mm wide X (8 to 16) mm thick
		Tightening Torque	2.5 to 6 Nm	Max 6 Nm	Max 6 Nm	Max 15 Nm	Max 25 Nm	Max 70 Nm
			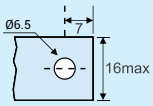	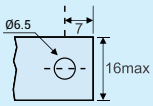	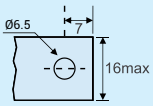	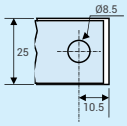	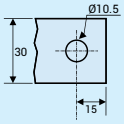	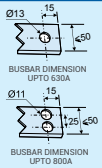

Electronic Modules

Communication Module

Communication module is the solution for connecting MCCBs to a Modbus network for remote supervision and control of circuit breaker.

Feature:

- MODBUS communication interface for all MCCB's -Thermal Magnetic, switch disconnector (Status Communication) and Electronic (status and parameter)
- Separate status indication for Trip indication (TAC) and Fault Trip Indication (ETAC) with electronic trip units
- Mechanical operation counter
- Remote operation Close, Open and Reset via communication with motor version
- EMI/EMC Compliant as per IEC - 60947-2
- DIN rail mountable
- Special stacking connector to stack multiple modules on DIN rail without using connecting wires

Specification		
Module		Modbus Memory Management Unit (M3U)
Module Location		Sub Module
Protocol		Modbus RTU
Baud Rate (bps)	Options	4800 / 9600 / 19200 / 38400 / 57600 / Auto
	Default	9600
Add.		1-247
Parity	Options	Even/Odd/None
	Default	None
Stop Bit	Options	1/2
	Default	1
Input Voltage Rated		24V DC ±20%
Physical Medium		RS 485 2W
LED Indication		Power
		Communication
Functions		
Status Indication		
AUX (ON/OFF Status)		✓
TAC (Trip Indication)		✓
ETAC (Fault Trip Indication)		✓
Maintenace Indicators		
Mechanical Operation Counter		✓
Comunication Remote Control Operations		
Open, Close & Reset		✓

Zone Selective Interlocking (ZSI) Module

Zone selective interlocking is a method which allows two or more circuit breakers to communicate with each other so that short circuit or ground fault can be cleared by the breaker closest to the fault with a minimum time delay. Module is a part of dsine-DZ MCCB system of iTRP-4 and iTRP-5 only. Enables signaling between upstream ACB (U Power Omega) or MCCB (iTRP-4/iTRP-5).

ZSI module can be connected to 15 downstream breakers with auxiliary supply.

The module can be used to coordinate the system for short circuit faults or earth faults or both.

The module is DIN rail mounted and has to be hardwired with downstream breakers.

Feature:

- Zone selective interlocking for Short circuit or ground fault or both
- EMI/EMC Compliant as per IEC-60947-2
- DIN rain mounted

Specification	
Module	Zone Selective Interlocking Module
Input Voltage Rated	24VDC ± 20%
Power Option	Self-powered
	Auxiliary supply
Maximum Current	10mA @ 24VDC
Configuration	Hardwired
Type of Protection	Short Circuit / Ground Fault / Both
Maximum length between two ZSI Module	300m
Maximum number of Circuit Breakers to Downstream (ZSI Out)	3 Nos (Self-powered)
	15 Nos (Auxiliary Powered)
LED Indication	1-Power (Green LED) - continuous ON

Temperature Module

Overheating of the busbar/cables can reduce the life of the insulation, busbar, cables and even breakers. Periodic loading conditions can cause the metal to heat and cool continuously resulting in the deterioration of the same and loosening of the joints, which is one of the major cause of short circuit fault.

Some of the causes of overheating are as follows

Any of the following reasons can lead to heat generation at the breaker terminal.

- Improper termination
- Improper Bus bar design
- Loose joints
- De-rating not considered while selection of breaker
- Eddy currents

Temperature module senses temperature through thermistors connected at each pole of MCCBs. It sends the data to trip unit and to remote system through communication module thus offering temperature metering & over temperature protection functionality.

Specification	
Module	Temperature Module
Module location	Sub module
Input Voltage Rated	24VDC ± 20%
Metering Temperature Range	-20 to 135 °C
Protection temperature Range	80-115 °C
Step Size Range	1 °C
Pre alarm Range	50% - 95%
Step Size (Pre alarm)	1%
Accuracy	± 2 °C
Mode	None, Trip, Alarm
Time Delay	1 Min
Indication	5 Leds 1 LED Power (Green Colour continuous) 4 LED - Over Temperature per sensor (Red Colour continuous) LED Behaviour: a. Pre -alarm - the respective red LED will blink 500ms ON/ 500ms OFF b. Trip - the respective red LED will blink 100ms ON/100ms OFF. c. OFF - Temperature below set threshold
Sensor	4 Thermistor
Sensor length	1 m each
Module mounting	Din rail

Programmable Relay Module (PRM)

Programmable relay module consists of 4 configurable potential free relay contacts -2 change over contacts and 2 NO contacts.

PRM can be used with electronic breaker or conventional thermal magnetic breaker along with communication module. With thermal magnetic breaker, the ON/OFF/TRIP status is indicated through the relays.

Also remote operation command is executed through one of the relay.

- 4 Programmable relay Contacts - 2 C/O & 2 NO
- Remote annunciation
- Breaker ON/OFF/Trip status indication
- EMI/EMC Compliant as per IEC -60947-2
- DIN rail mountable

Specification	
Module	Programmable Relay Module
Input Voltage Rated	24VDC ± 20%
LED Indications	1 LED for Power (Green LED) blinking:- Standalone - 100msec ON/ 100msec OFF On CAN Bus - 500msec ON/ 500msec OFF
	4 LED for Relay output status (Red LED Steady ON, on relay activation)
Relay contact	4 configurable contacts: 2 change over contacts + 2 NO contacts
	6 Amp, 250VAC/24VDC
Maximum switching Power	1500 VA/150W
Relay activation sources	Trip Status of all the protections offered by iTRP-4 & iTRP-5. Alarm Status of basic protections in iTRP-4 & iTRP-5. Breaker Status – ON / OFF / TRIP

External Neutral Sensor (ENS)

External Neutral Sensors ENS provides solution for addressing the requirements of 3-phase 4-wire system wherein the neutral pole is not included in the MCCB.

ENS are suitable for electronic release type dsine DZ MCCBs.

ENS offers neutral current sensing when used with MCCBs equipped with iTRP-1 to iTRP-4 releases, as well as current and voltage sensing for MCCBs equipped with iTRP-5 releases.

Salient Features

- Current sensing through Rogowski coils offering a high linearity in current sensing
- Suitable for voltage sensing for Energy metering purposes
- Connection via micro USB for hassle-free connection
- Types of following termination are offered
  - Prepared Cables lug
  - Spreaders
  - Direct Links

MCCB	Suitable ENS Type	Current Rating
DZ1/DZ2	DZ1/2 ENS	25A - 160A
DZ4	DZ4 ENS	160A - 250A
DZ6	DZ6 ENS	250A - 400A
DZ7	DZ7 ENS	400A - 800A
DZ7 1000A	DZ7-1000A ENS	1000A

Additional Technical Information

Altitude Correction Factors

Altitude does not significantly affect circuit breaker characteristics up to 2000 m. Above this altitude, it is necessary to take into account the decrease in the dielectric strength and cooling capacity of air.

The following tables give the altitude correction factors for various circuit breaker characteristics

	Description		De-rating Factor			
			<2000 m	3000 m	4000 m	5000 m
DZ1-DZ7	Rated Operational Voltage	U_e	1.00	0.90	0.80	0.70
	Rated Nominal Current	I_n	1.00	0.97	0.94	0.91
	Insulation Voltage	U_i	1.00	0.78	0.69	0.61
	Impulse Withstand Voltage	U_{imp}	1.00	0.78	0.69	0.61

Power Loss Data

The power loss of an electrical device is essential for determining the overall system efficiency, measured in watts. According to Annex G of IEC-60947-2, the total power loss of a circuit breaker is calculated by multiplying the power loss per pole by the number of poles. This measurement, conducted under rated current in free air and with minimal voltage drop across the terminals under cold conditions, provides an indication of the heat generated in specific operational scenarios.

Frame	Rating (A)	Power loss per pole (W)
DZ0	16	2.1
	20	3.3
	25	5.2
	32	4.0
	40	6.4
	50	4.0
	63	6.5
	80	7.2
	100	10.5
	125	16.4

Frame	Rating (A)	Power loss per pole (W)
DZ1-TMR	16	3.8
	20	6.0
	25	5.0
	32	8.2
	40	4.8
	50	7.5
	63	7.4
	80	8.0
	100	8.0
	125	9.4
	160	14.1
	200	20

Frame	Rating (A)	Power loss per pole (W)
DZ1-MPR	25	1.5
	40	2.2
	63	3.0
	100	5.0
	160	12.8
	200	18

Frame	Rating (A)	Power loss per pole (W)
DZ2-TMR	16	4.0
	20	4.0
	25	4.4
	32	4.5
	40	5.0
	50	5.6
	63	6.3
	80	7.8
	100	9.7
	125	12.2
	160	19.1

Frame	Rating (A)	Power loss per pole (W)
DZ2-MPR	25	4.0
	40	4.5
	63	5.6
	100	9.5
	160	17.5

Frame	Rating (A)	Power loss per pole (W)
DZ4-TMR	160	17.3
	200	20.6
	250	25.7

Frame	Rating (A)	Power loss per pole (W)
DZ4-MPR	160	7.7
	200	11
	250	19

Frame	Rating (A)	Power loss per pole (W)
DZ6-TMR	200	11.6
	250	16.1
	320	25.4
	400	42.7

Frame	Rating (A)	Power loss per pole (W)
DZ6-MPR	250	13.1
	400	35.2

Frame	Rating (A)	Power loss per pole (W)
DZ7-TMR	500	31
	630	44
	800	70

Frame	Rating (A)	Power loss per pole (W)
DZ7-MPR	630	32.9
	800	58.7
	1000	90.6

Temperature Derating Details

DZ0 MCCBs

Reference Temperature - 40°C

Ambien Temperature (° C)	Breaker Rating (A)									
	16	20	25	32	40	50	63	80	100	125
10	19.0	23.7	29.7	38.0	47.4	59.3	74.7	94.9	118.6	146.0
15	18.5	23.1	28.9	37.0	46.2	57.8	72.8	92.4	115.5	142.5
20	18.0	22.5	28.1	36.0	45.0	56.2	70.8	89.9	112.4	139.0
25	17.5	21.9	27.3	35.0	43.7	54.7	68.9	87.4	109.3	135.5
30	17.0	21.2	26.6	34.0	42.5	53.1	66.9	85.0	106.2	132.0
35	16.5	20.6	25.8	33.0	41.2	51.6	65.0	82.5	103.1	128.5
40	16.0	20.0	25.0	32.0	40.0	50.0	63.0	80.0	100.0	125.0
45	15.5	19.4	24.2	31.0	38.8	48.5	61.0	77.5	96.9	121.5
50	15.0	18.8	23.5	30.0	37.5	46.9	59.1	75.0	93.8	118.0
55	14.5	18.1	22.7	29.0	36.3	45.4	57.1	72.6	90.7	114.5
60	14.0	17.5	21.9	28.0	35.0	43.8	55.2	70.1	87.6	111.0
65	13.5	16.9	21.1	27.0	33.8	42.3	53.2	67.6	84.5	107.5

DZ1, DZ2, DZ4, DZ6 & DZ7 MCCBs

Thermal Magnetic Releases

Dsine DZ derating is 1% of I_n/°C, starting from 50°C
For example,
I_n=100A for DZ TMR, derating will start from 50°C to 70°C
At 60°C @ I_n = 100A
Deration would be (60°C -50°C) x 1A
= 10°C x 1A
= 10A
i.e. 100A-10A = 90A

Microprocessor Releases

Dsine DZ derating is 1% of I_n/°C, starting from 55°C
For example,
I_n=100A for DZ MPR, derating will start from 55°C to 70°C
At 60°C @ I_n = 100A
Deration would be (60°C -55°C) x 1A
= 5°C x 1A
= 5A
i.e. 100A-5A = 95A

Characteristic Curves

Trip Curves - Thermal Magnetic Release

DZ0 Variable Thermal - Fixed Magnetic

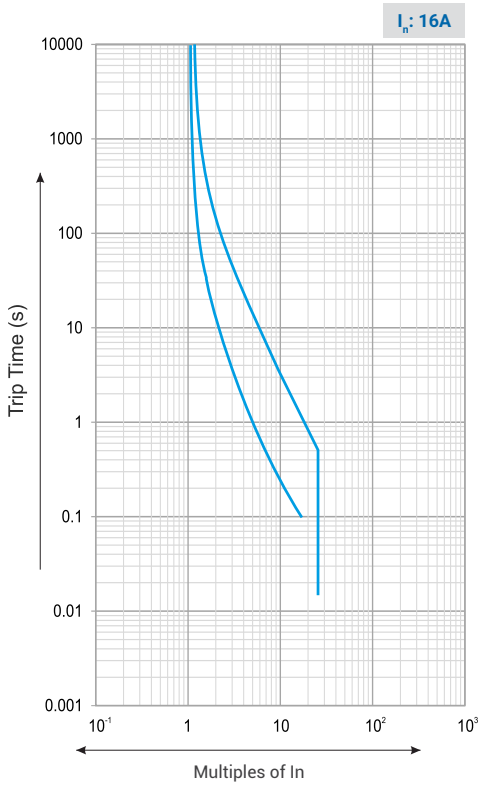

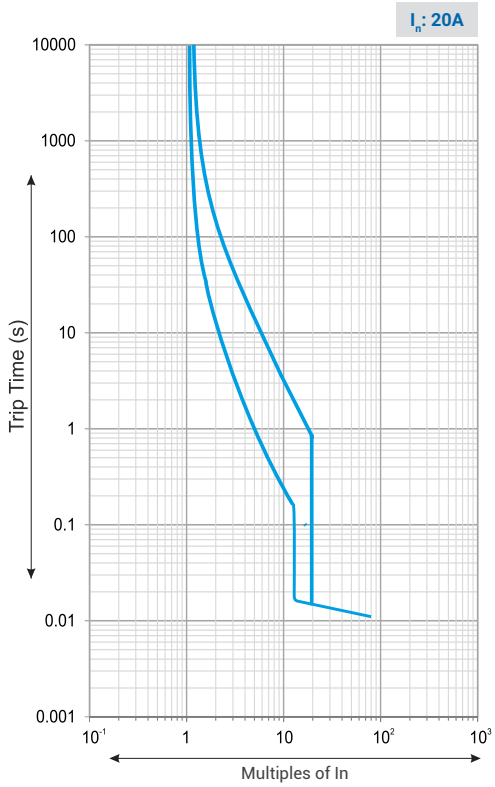

DZ0 Variable Thermal - Fixed Magnetic

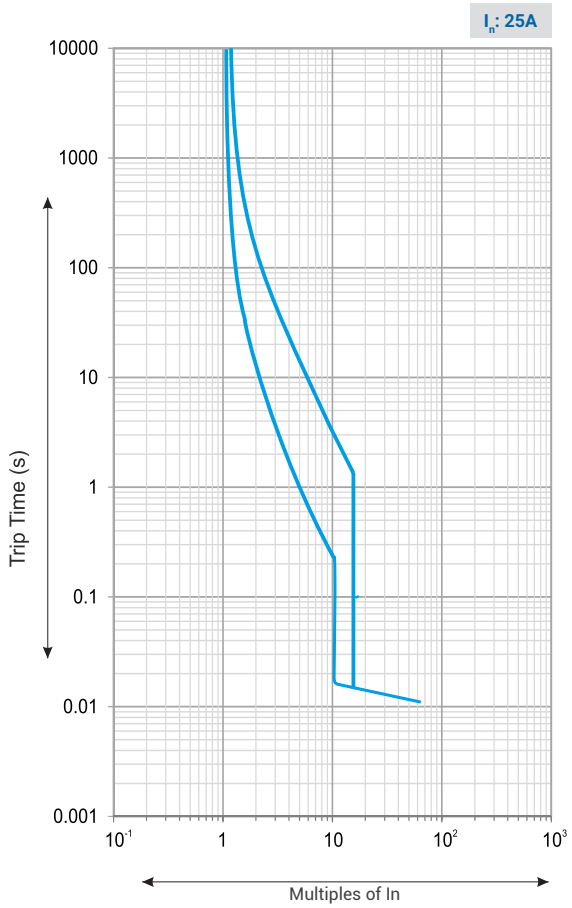

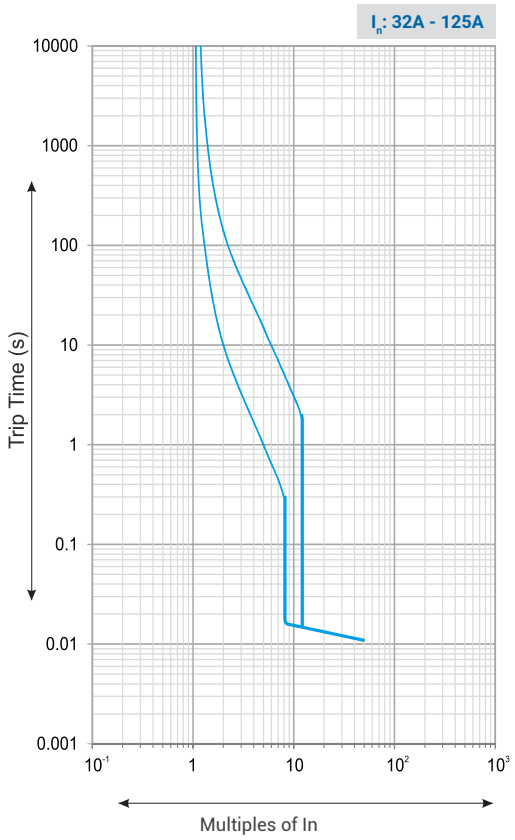

DZ1/DZ2 Variable Thermal - Fixed Magnetic

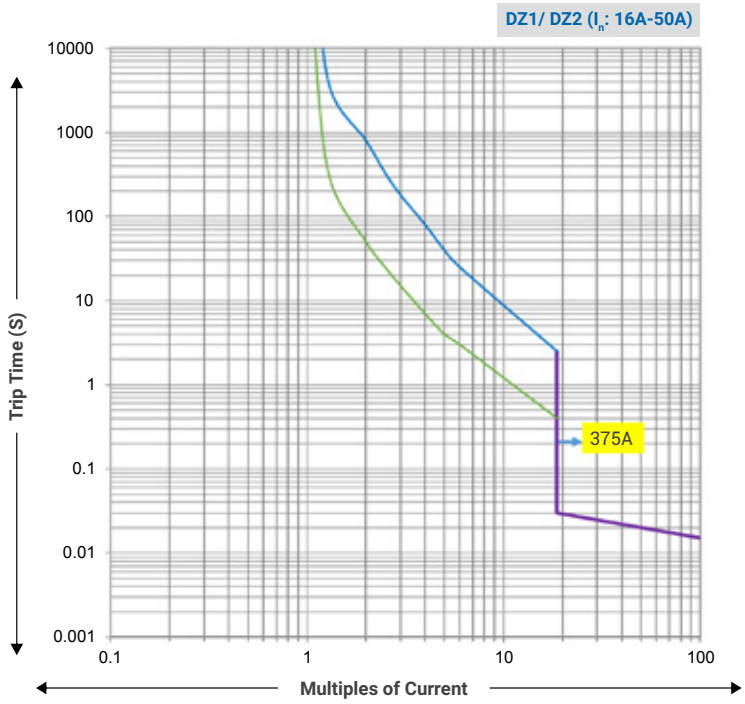

DZ1 Variable Thermal - Variable Magnetic

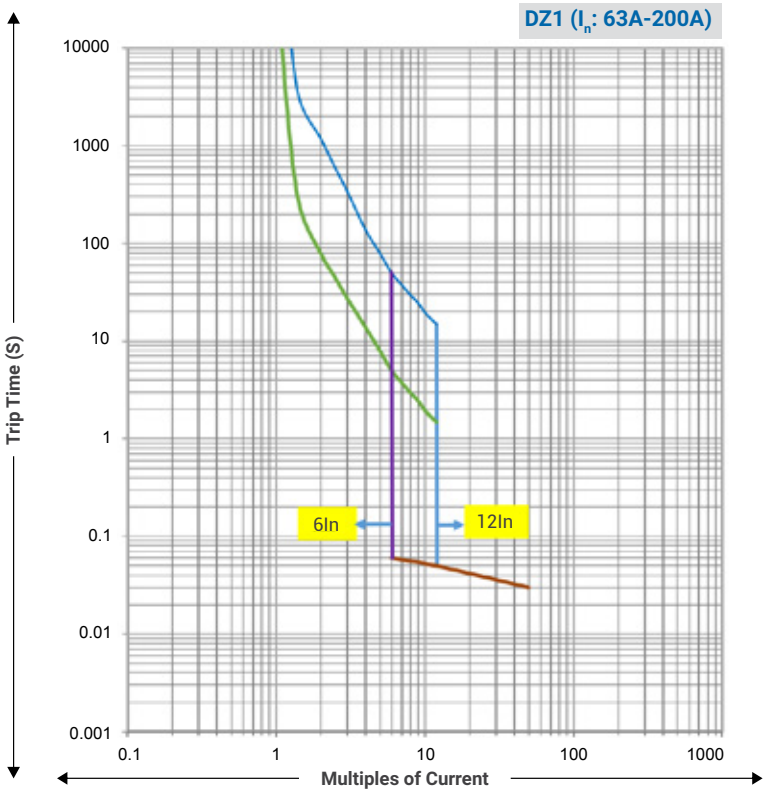

DZ2 Variable Thermal - Variable Magnetic

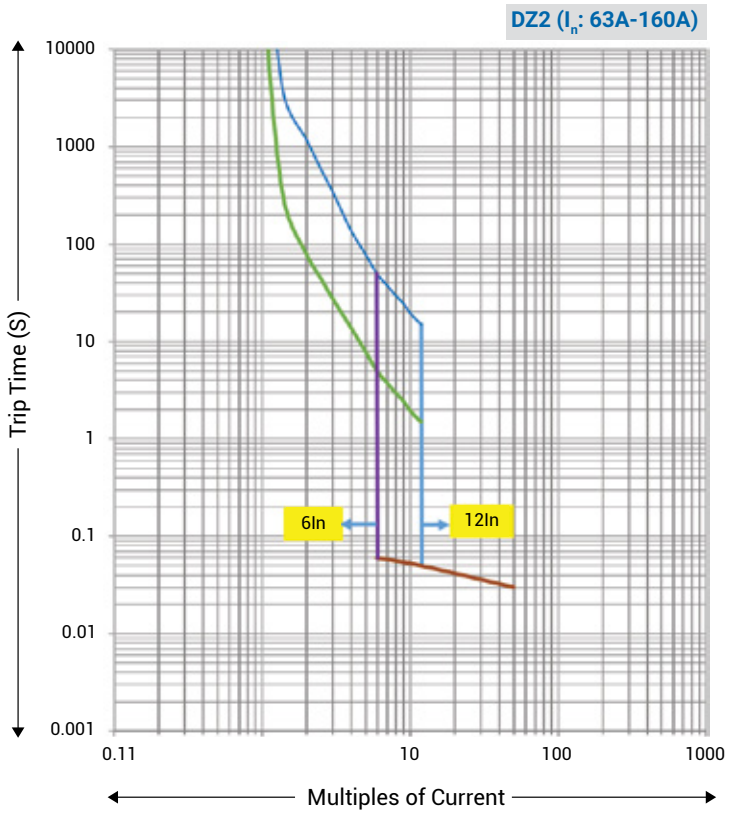

DZ4 Variable Thermal - Variable Magnetic

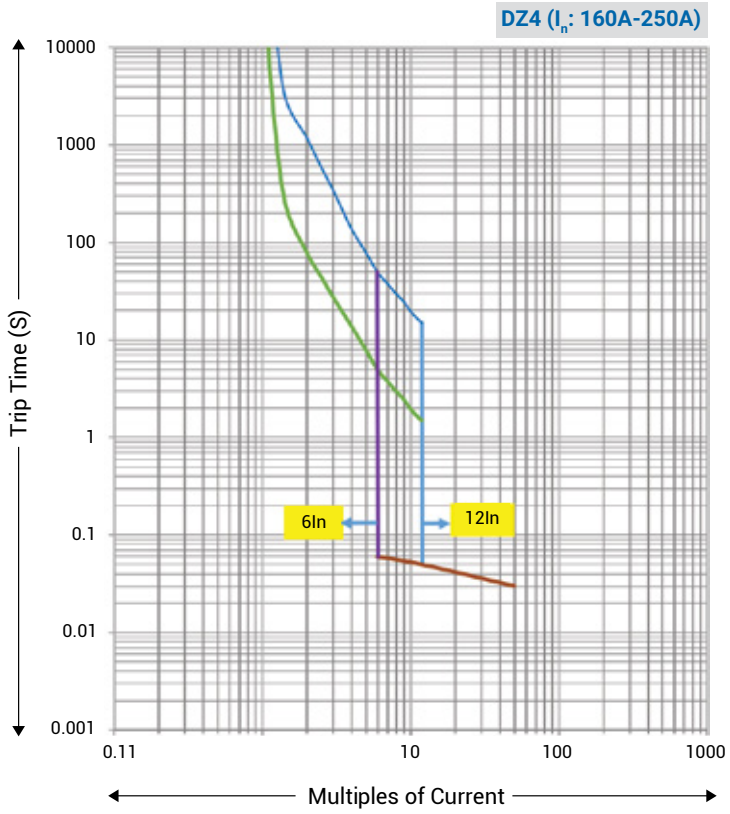

Trip Curves - Thermal Magnetic Release

DZ6 Variable Thermal - Variable Magnetic

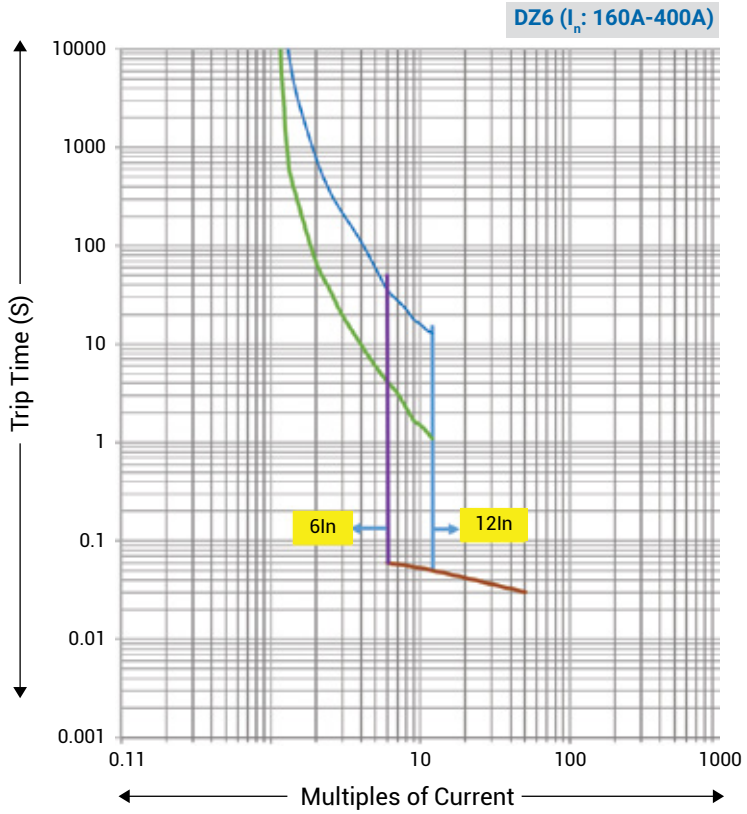

DZ7 Variable Thermal - Variable Magnetic

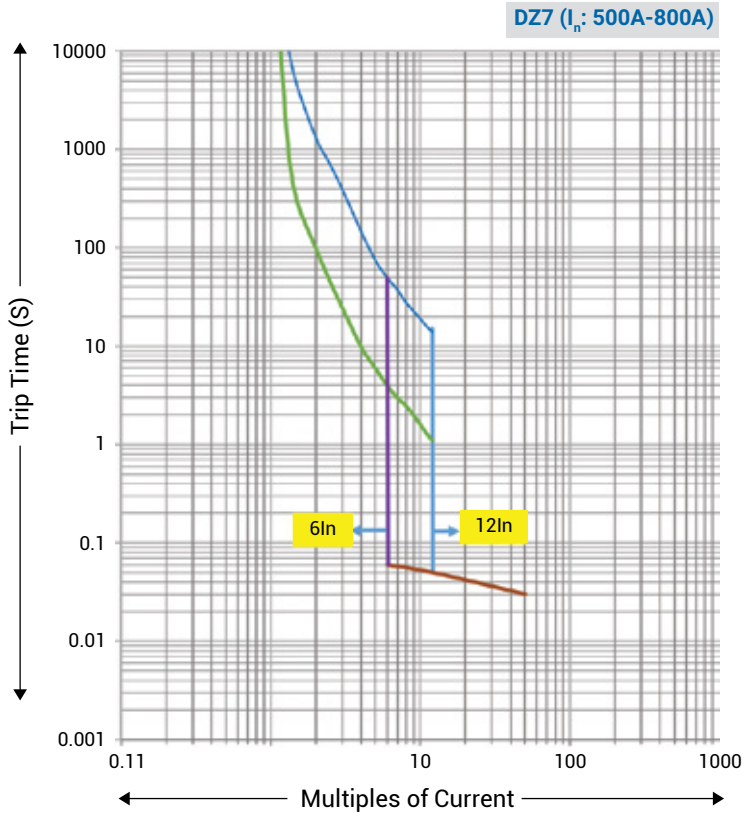

DZ1 to DZ6 iTRP-1

Overload 3s@6Ir

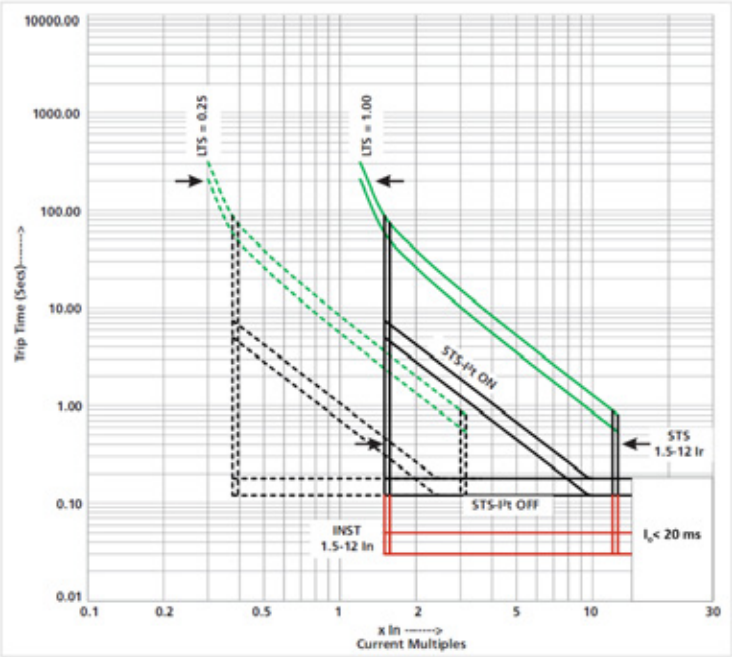

Overload 10s@6Ir

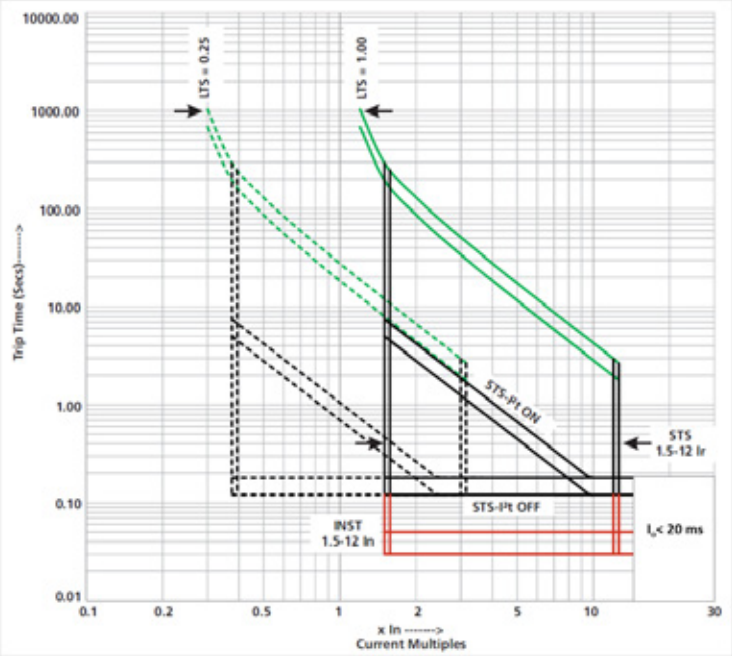

Trip Curves - Microprocessor Release (iTRP)

Overload 3s@7.2Ir

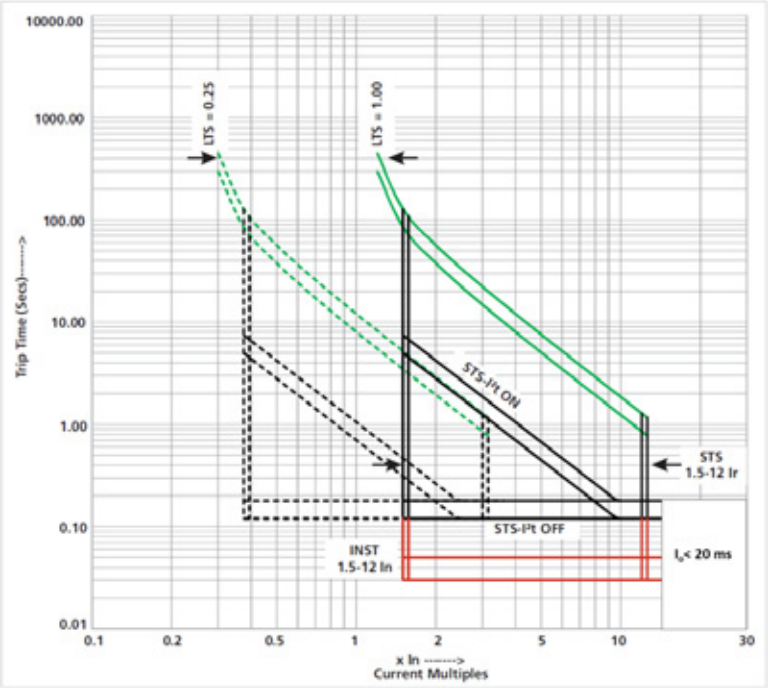

Overload 10s@7.2Ir

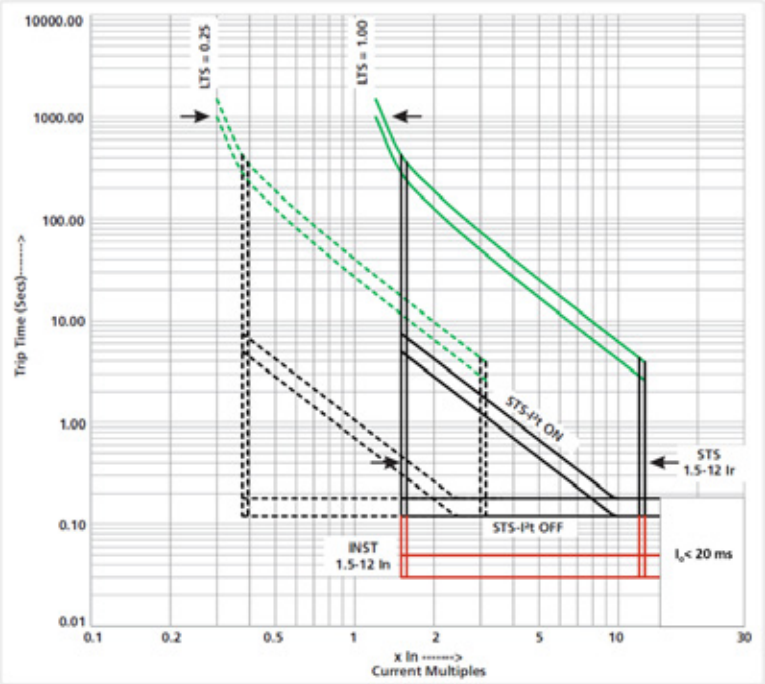

DZ7 630 iTRP-1

Overload 3s@6Ir

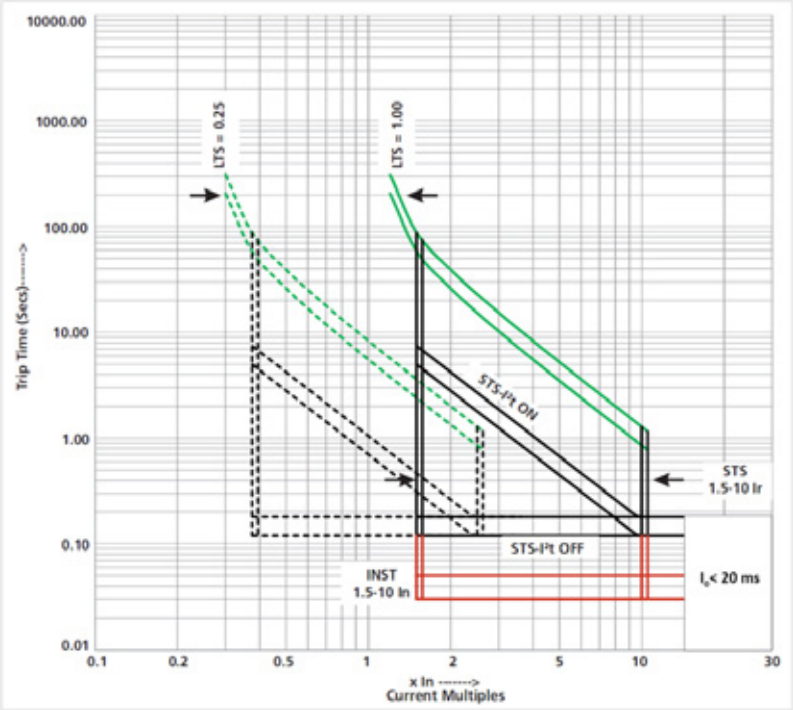

Overload 10s@6Ir

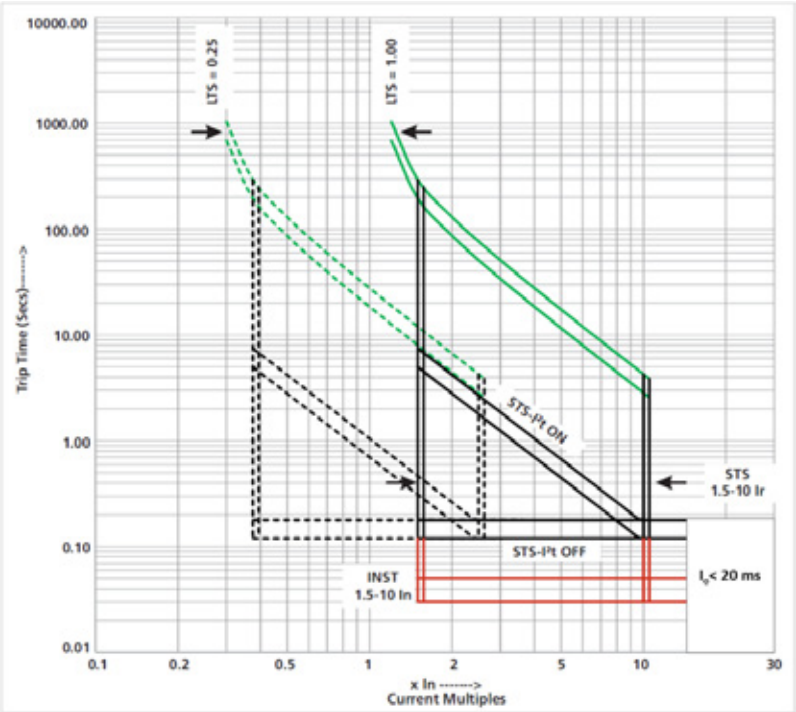

Trip Curves - Microprocessor Release (iTRP)

Overload 3s@7.2Ir

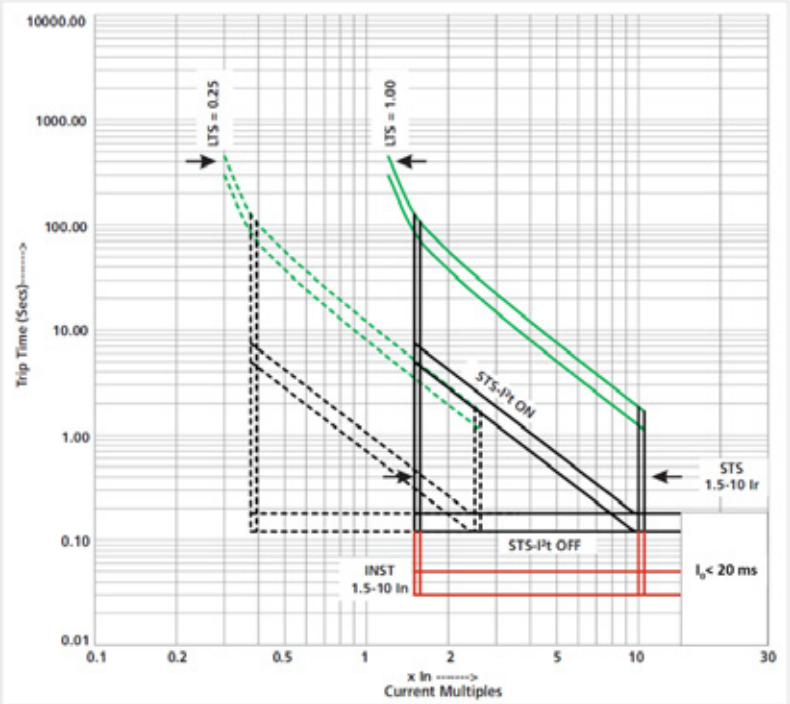

Overload 10s@7.2Ir

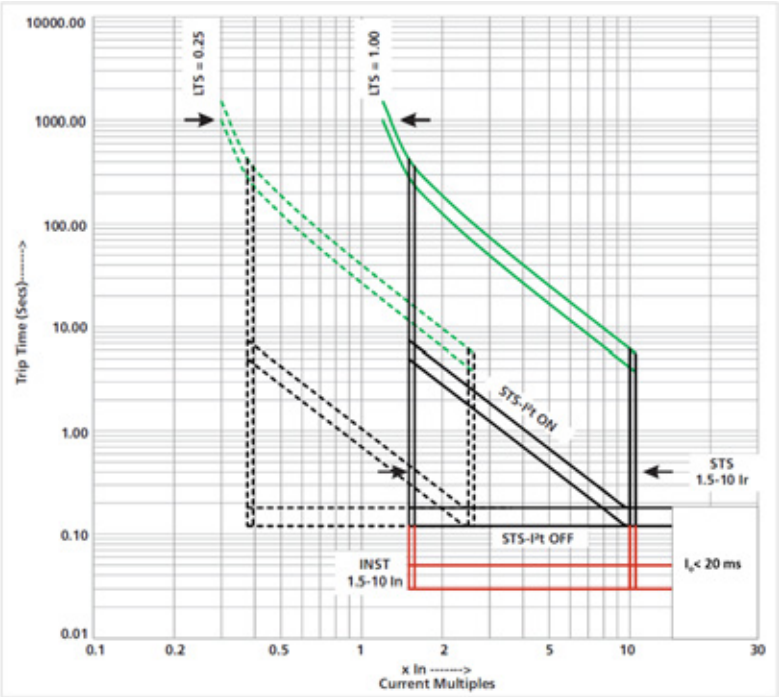

DZ7 800 iTRP-1

Overload 3s@6Ir

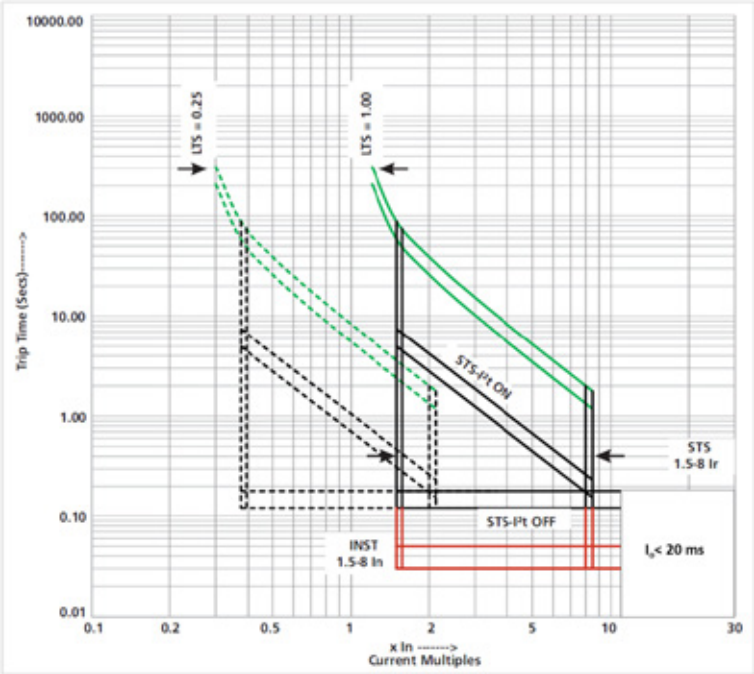

Overload 10s@6Ir

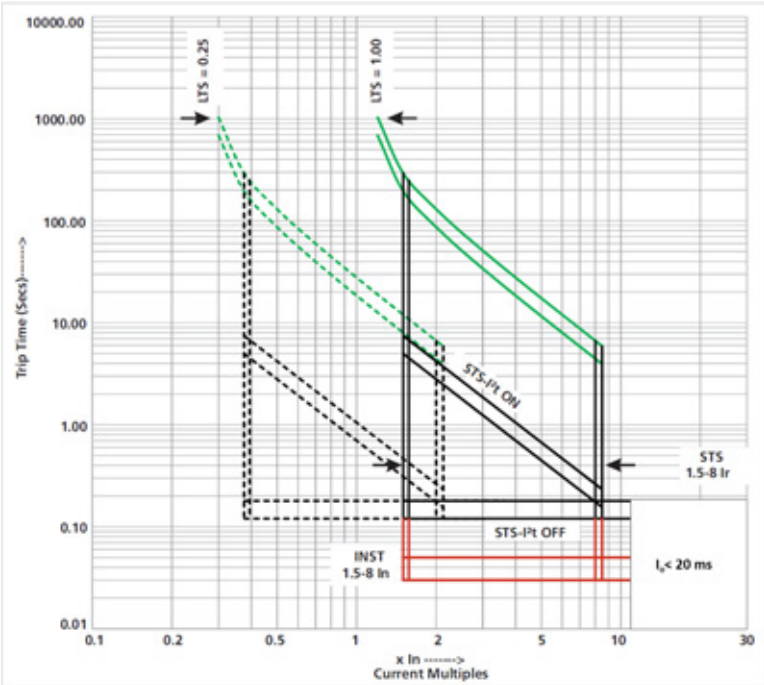

Trip Curves - Microprocessor Release (iTRP)

Overload 3s@7.2Ir

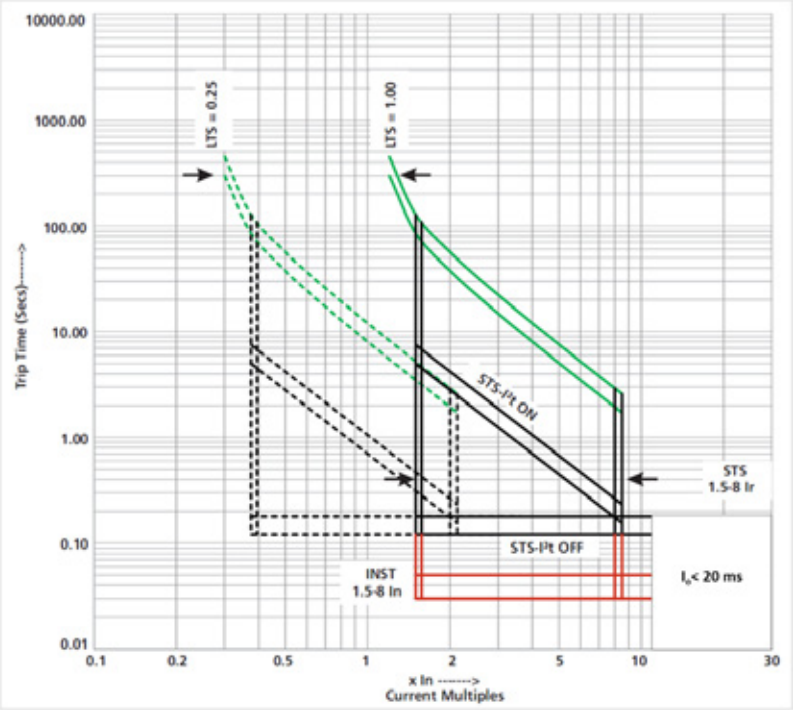

Overload 10s@7.2Ir

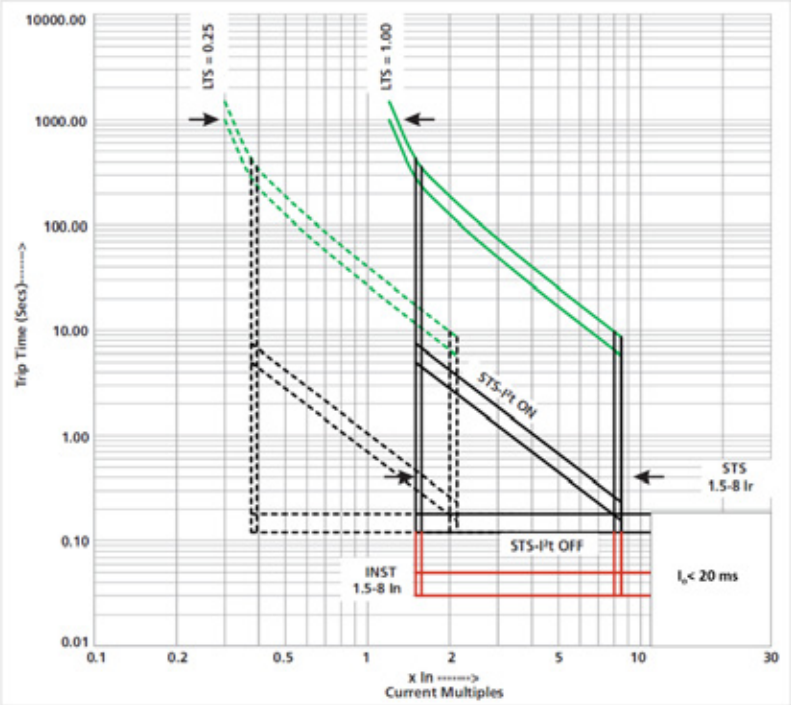

DZ1-DZ6 iTRP-2/3/3C

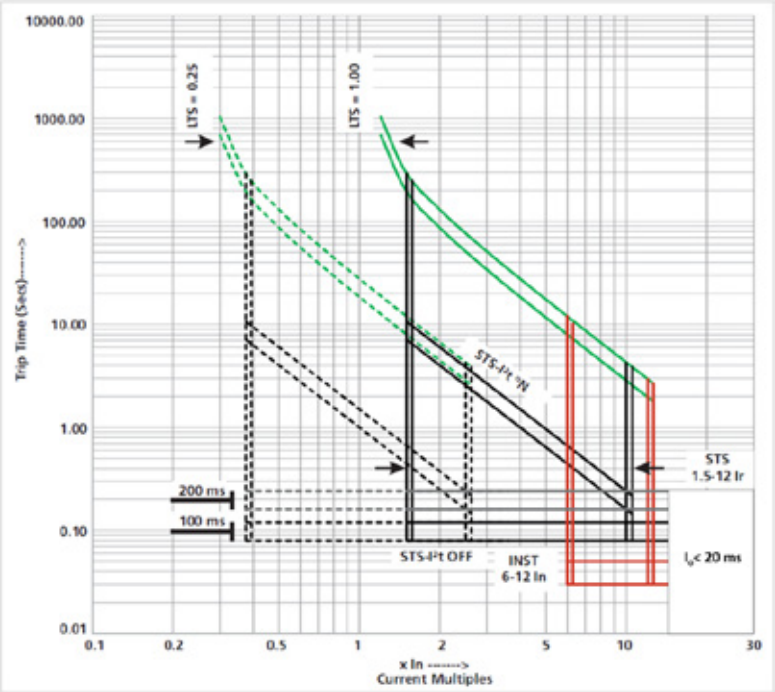

DZ7-630 iTRP-2/3/3C

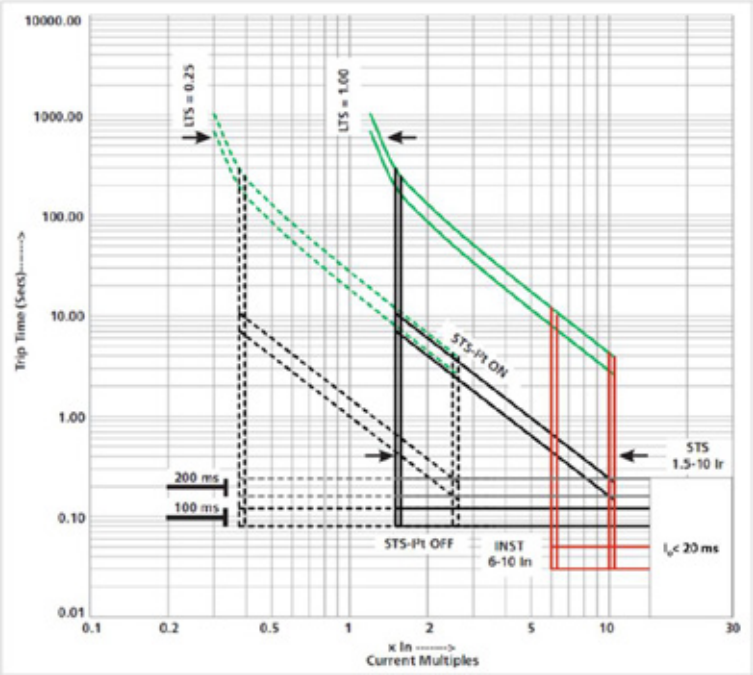

DZ7-800 iTRP-2/3/3C

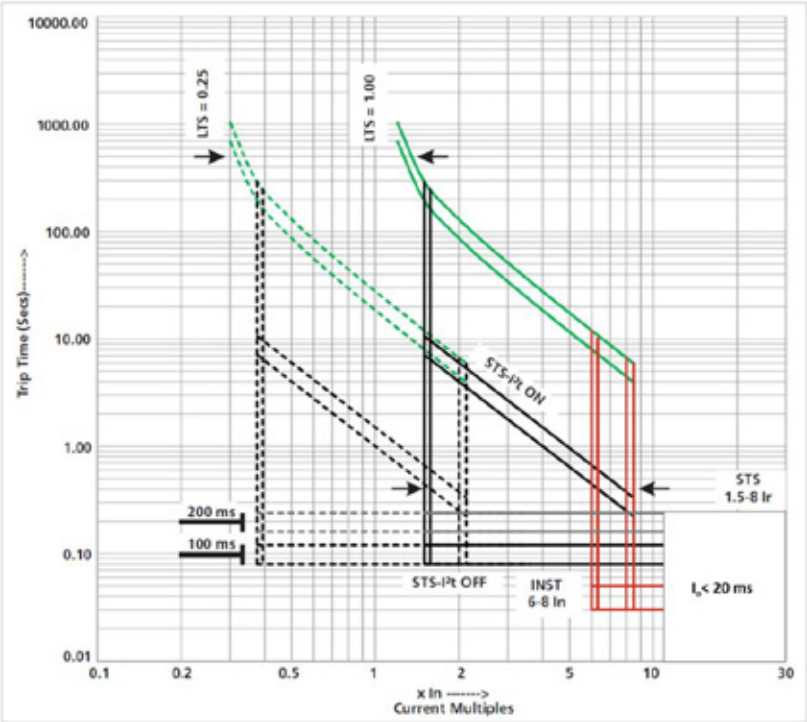

Earth Fault

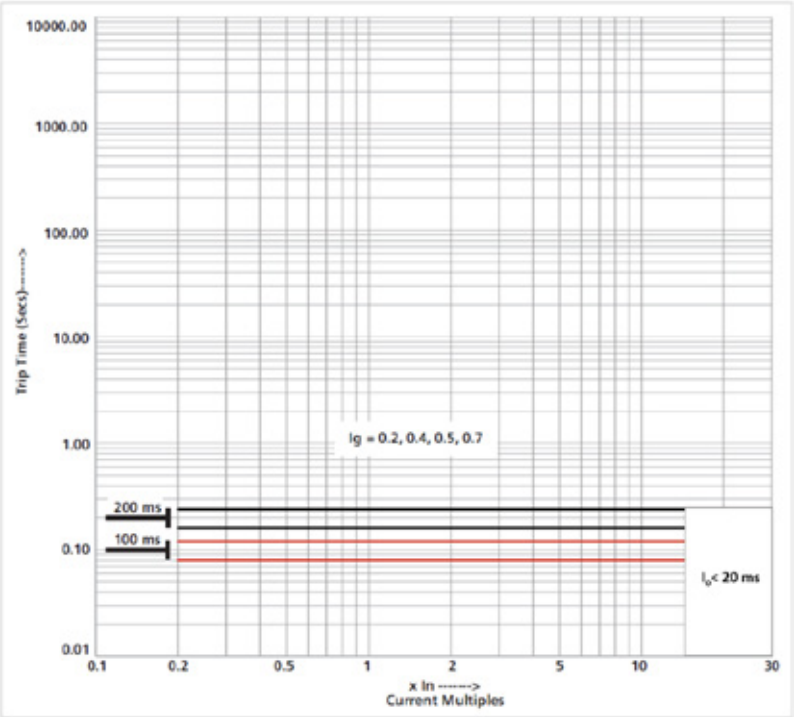

Current-Limiting Curve

DZ @ 415V

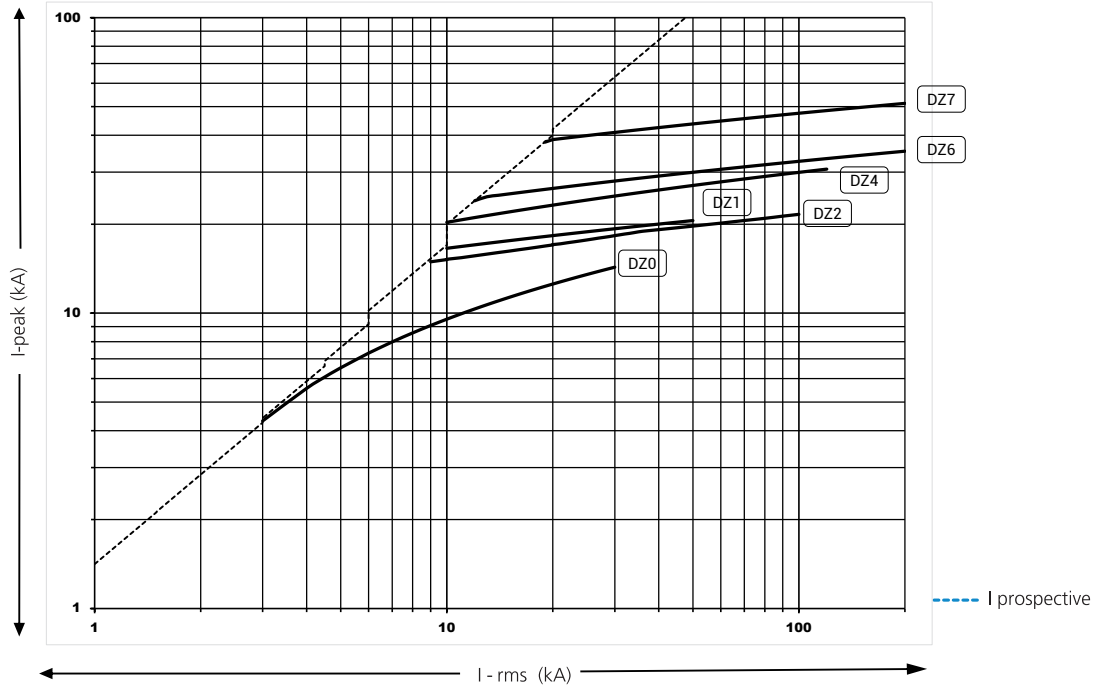

DZ @ 690V

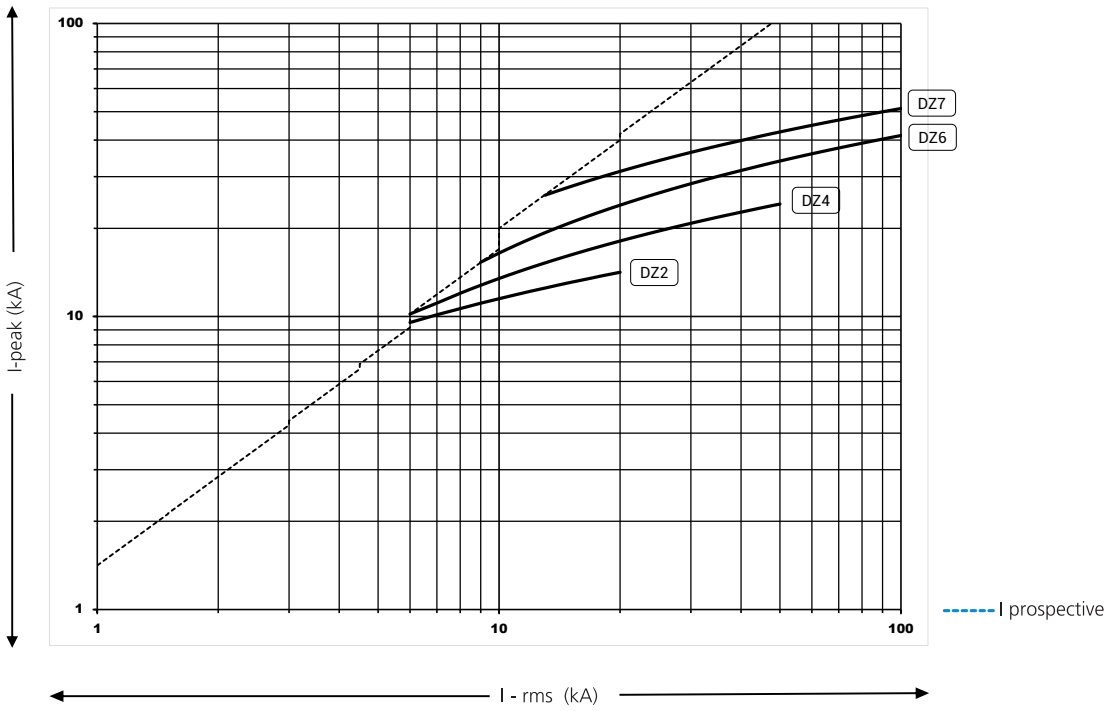

DZ @ 800V

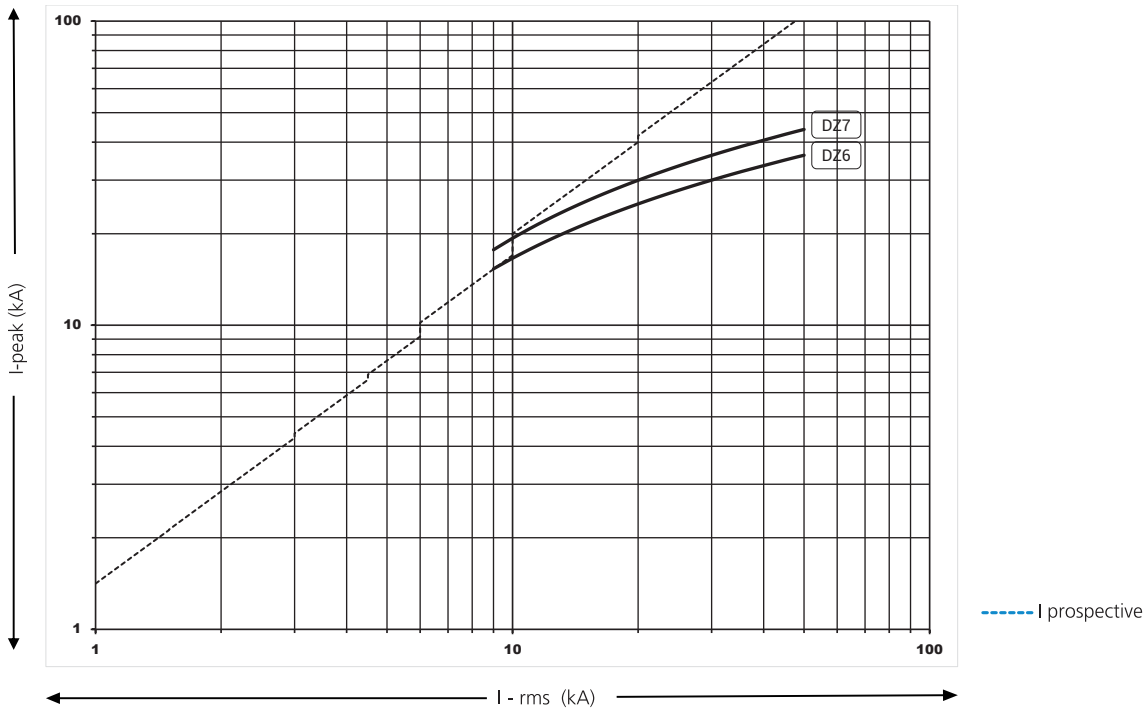

Energy-Limiting Curve

DZ @ 415V

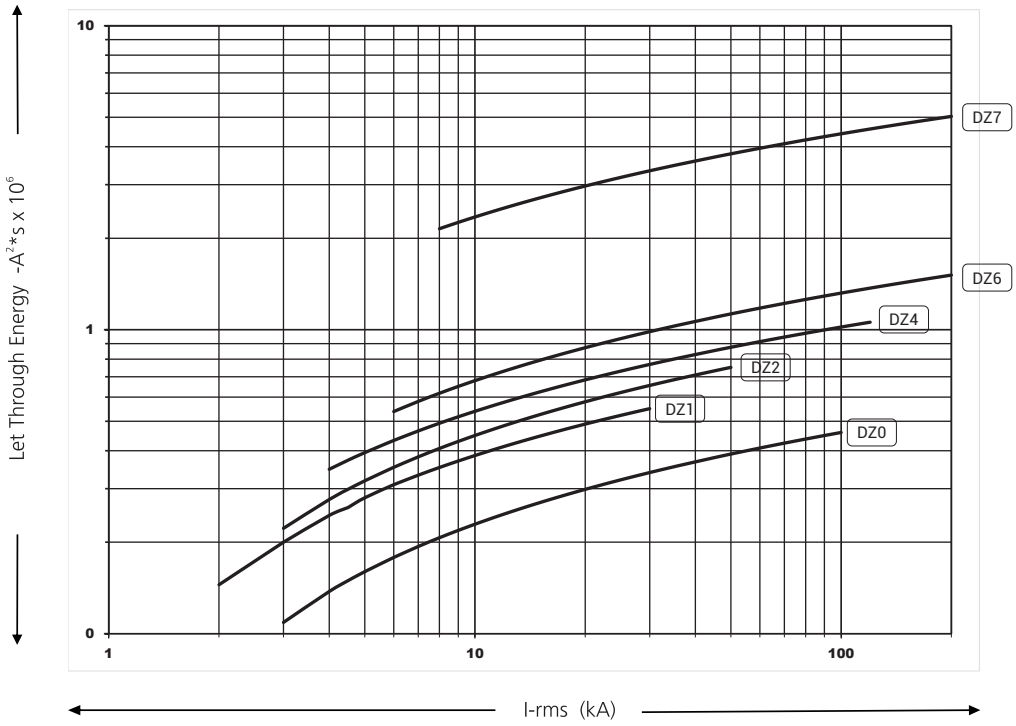

DZ @ 690V

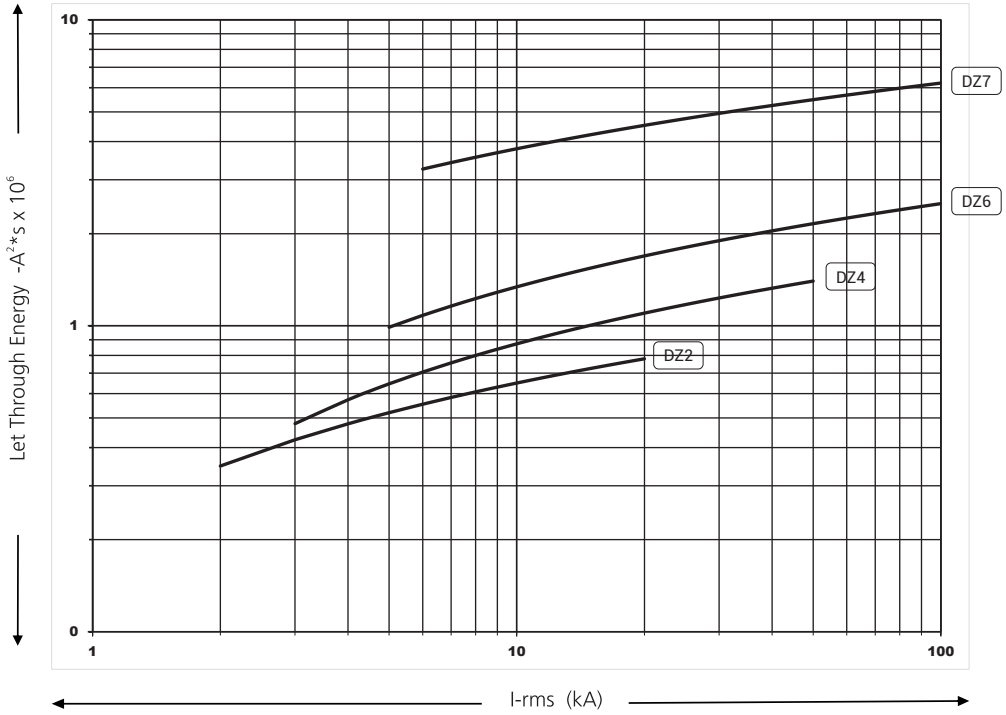

DZ @ 800V

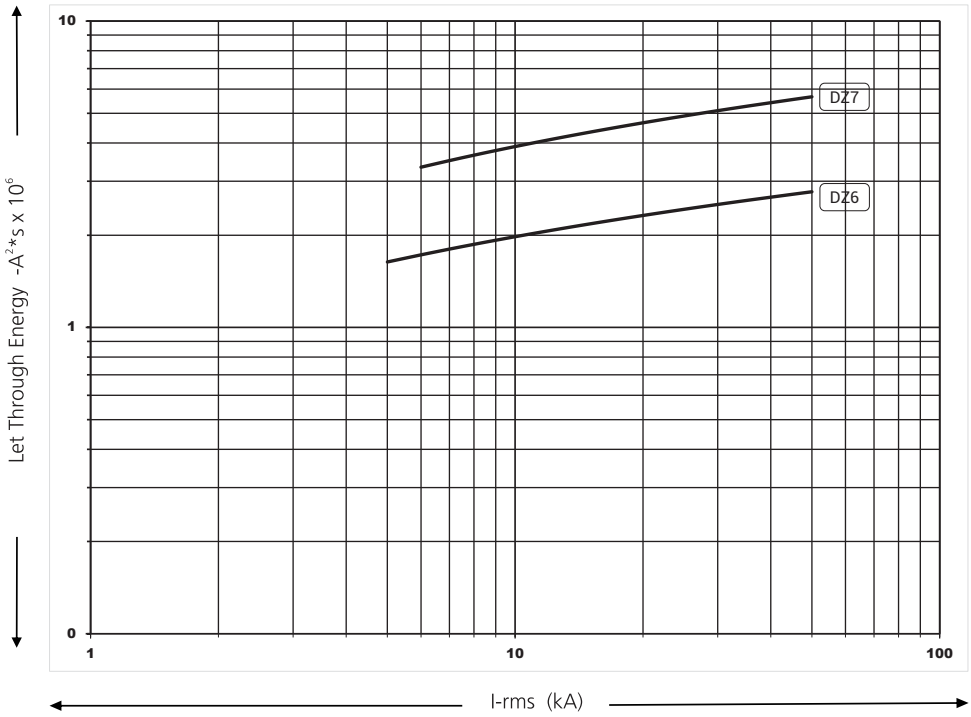

Wiring Diagrams

DZ1/2 EOM

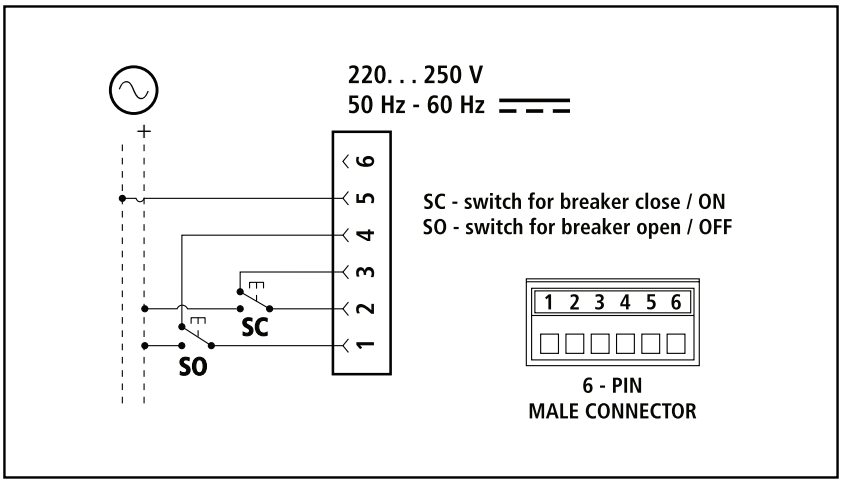

IMPORTANT NOTE

1. Wiring to be done by professional only.
2. Type of signal - Pulsated supply (<500ms)
3. If MCCB is tripped in OPEN / OFF state then, shift the EOM mode to manual and RESET the MCCB manually using the handle.
4. Always remove the connector before hinging the EOM backward.
5. Use an external fuse to protect the device and circuit.

DZ6/7 EOM

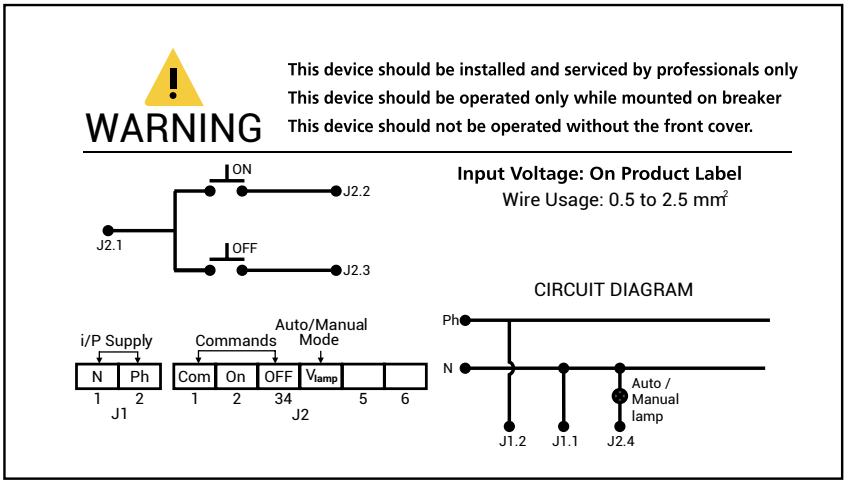

IMPORTANT NOTE

1. Wiring to be done by professional only. Insert wires in the connectors and then insert them in the MO.
2. Type of signal - Power supply in 2 pins (Continuous) & Control Supply in 6 pins (>50ms)
3. If MCCB is tripped in OPEN / OFF state then, shift the EOM mode to manual and RESET the MCCB manually using the handle.
4. Always remove the connector before hinging the EOM backward.
5. Use an external fuse to protect the device and circuit.
6. Delay time between OFF/ Reset Command to ON Command - 3000ms

Dimensions

DZ0 Overall Dimensions

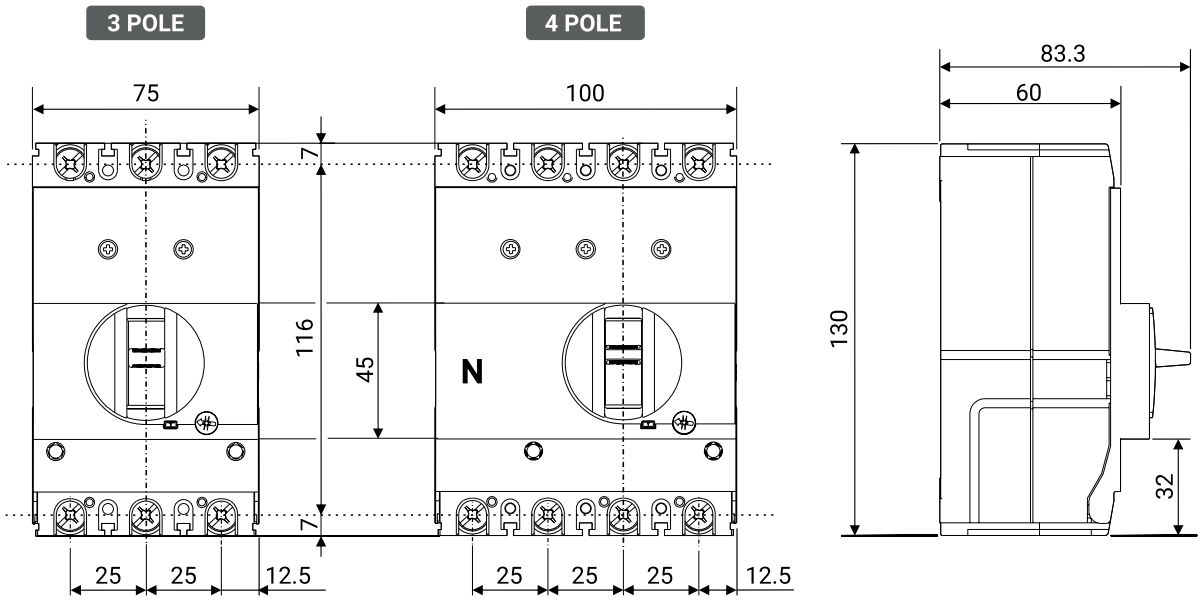

DZ0 Mounting Dimensions

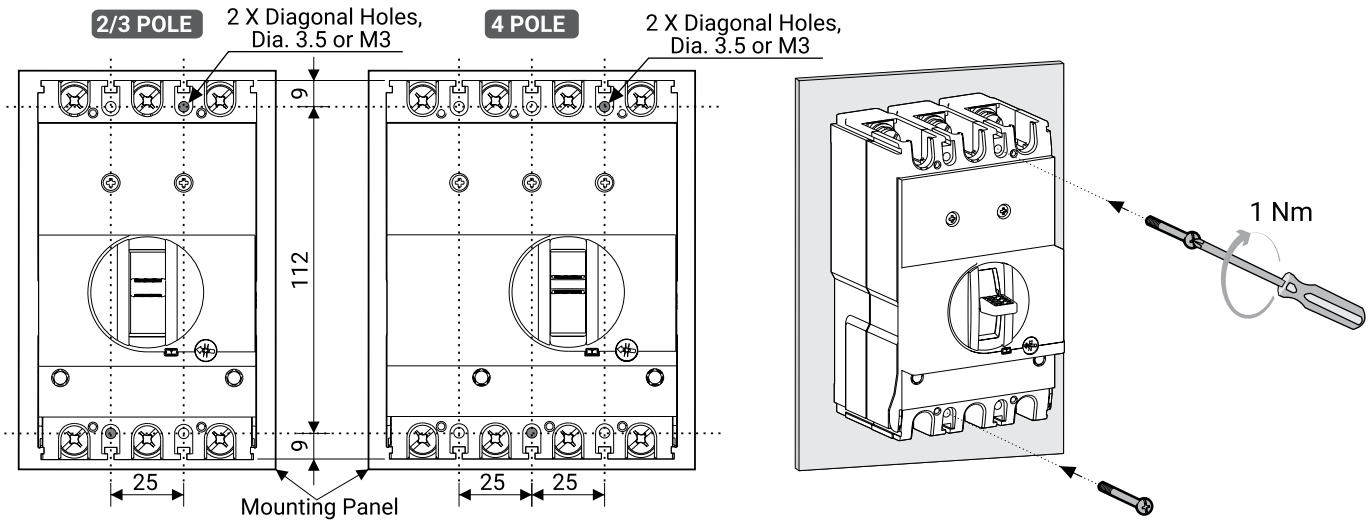

DZ0 Panel Cutout

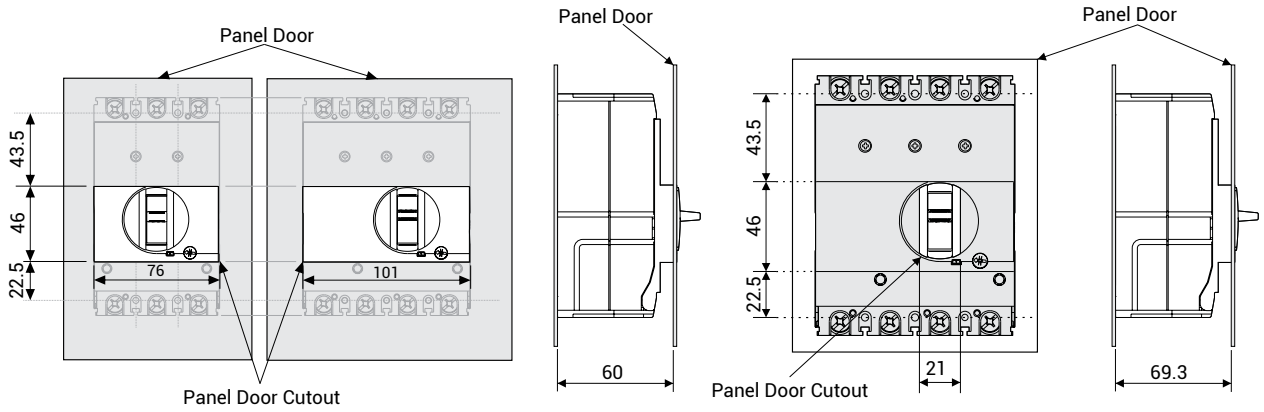

DZ0 Overall MCCB Dimensions with Spreader Links

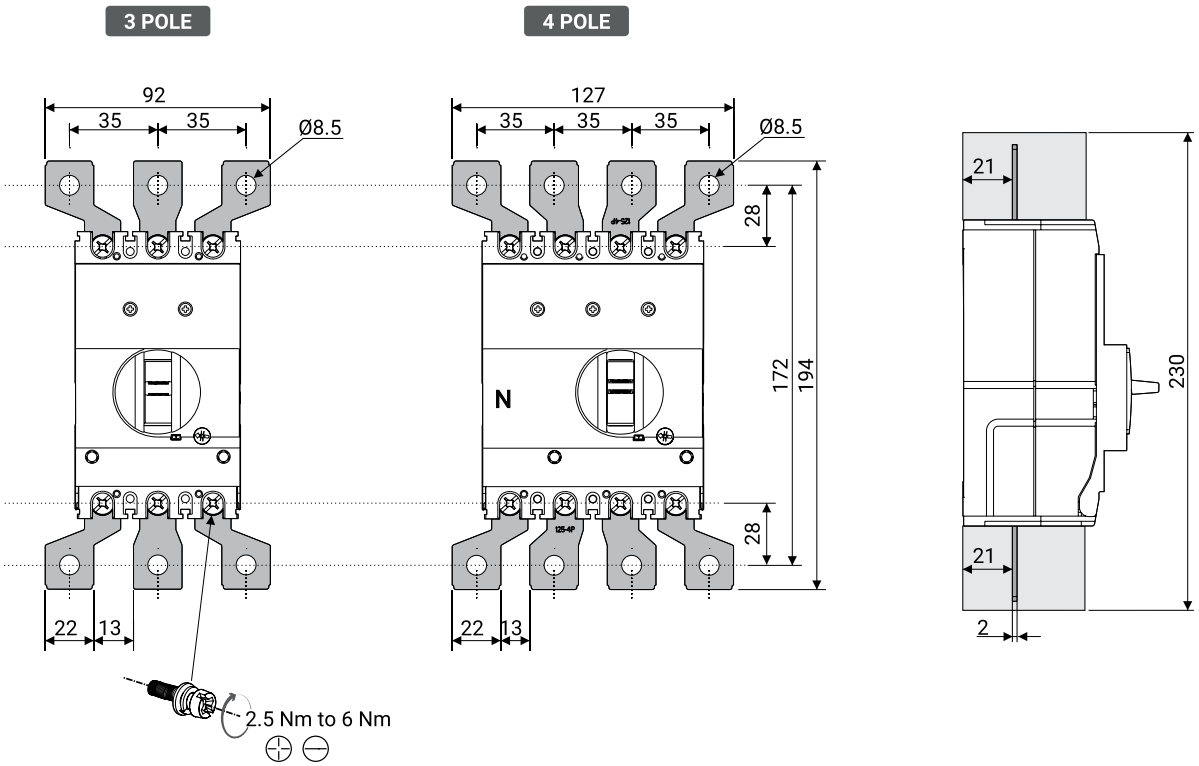

DZ1 Overall Dimensions

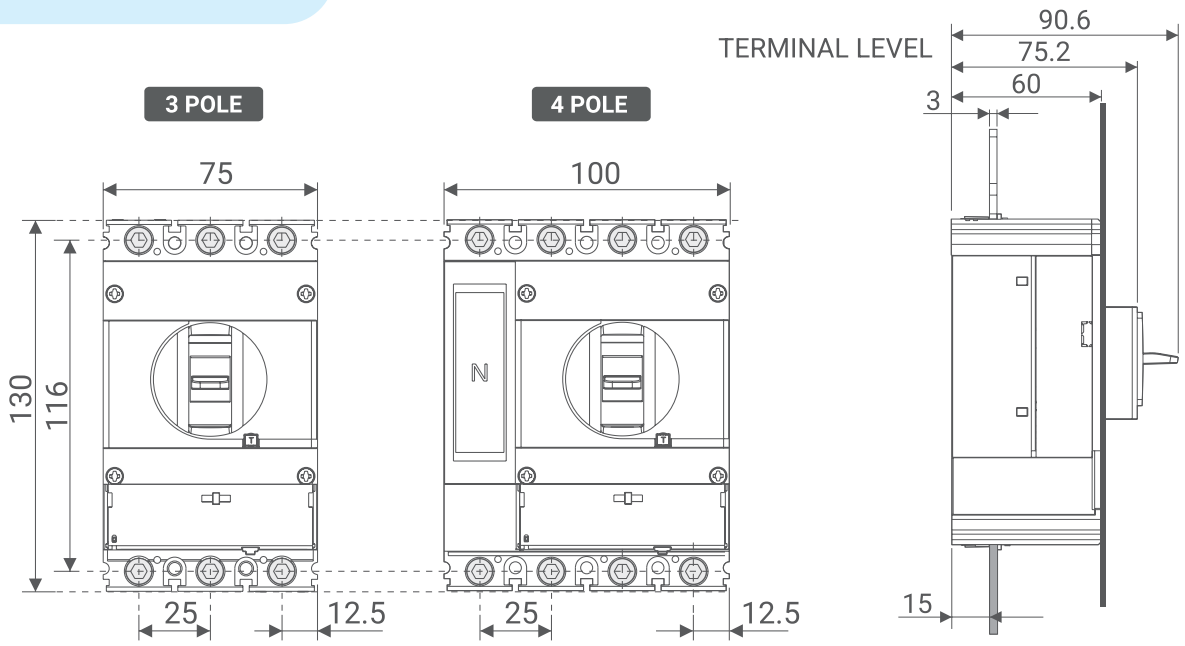

All dimensions are in mm

DZ1 Mounting Dimensions

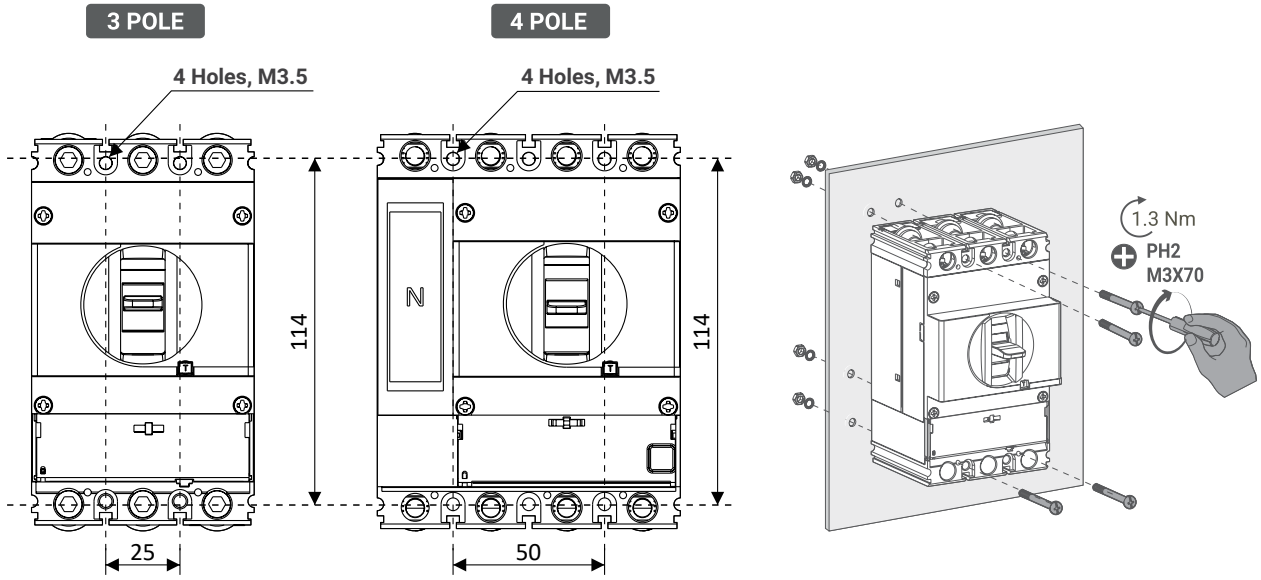

All dimensions are in mm

DZ1 Panel Cutout

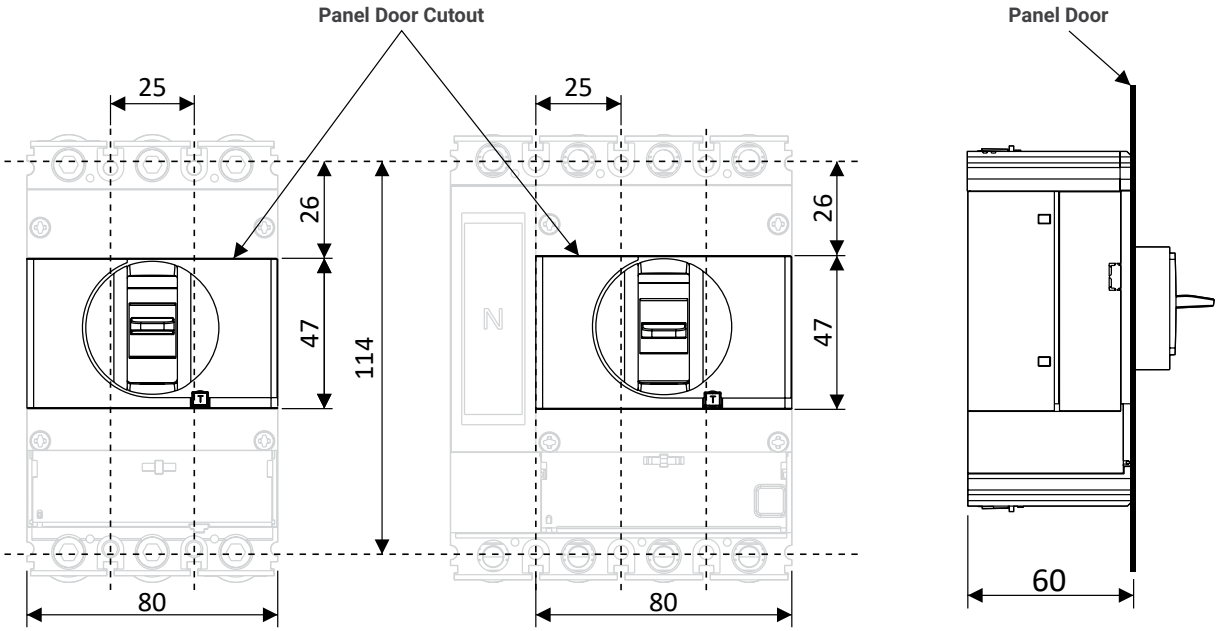

DZ1 Overall MCCB Dimensions with Spreader Links

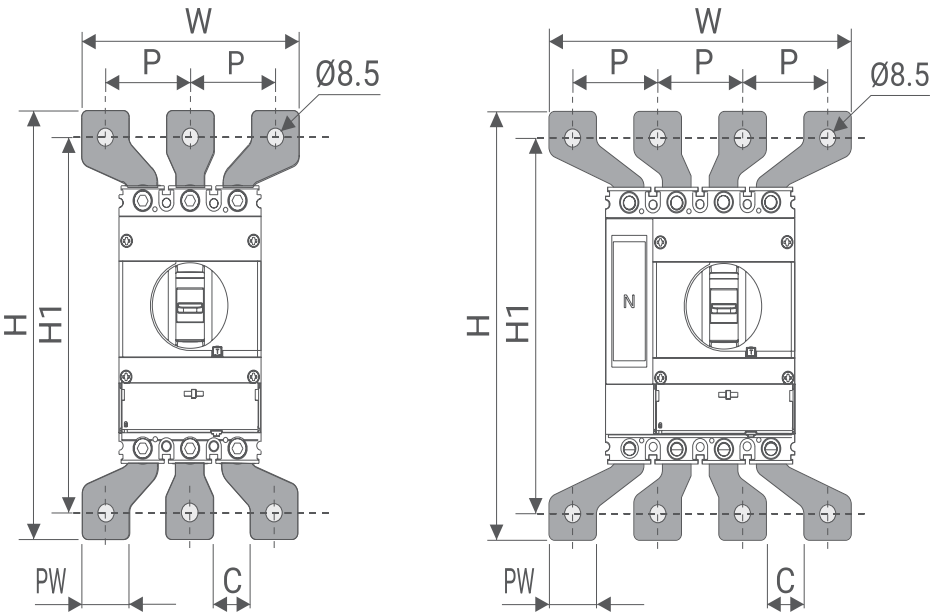

All dimensions are in mm

Variables	Spreader Links 20 mm		Spreader Links 26 mm	
	3P	4P	3P	4P
W	115	160	127	178
H	200	200	200	200
H1	176	176	176	176
PW	25	25	25	25
C	20	20	26	26
P	45	45	51	51

Spreader Thickness = 3mm up to 160A and 4mm for 200A

DZ2 Overall Dimensions

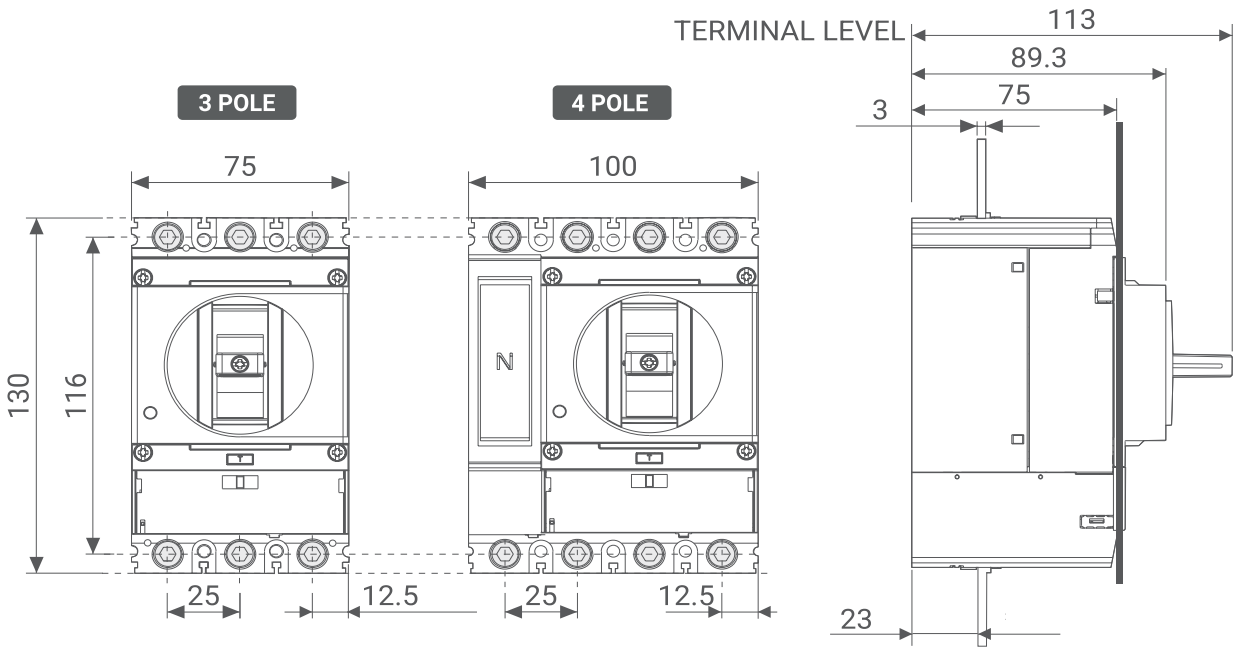

All dimensions are in mm

DZ2 Mounting Dimensions

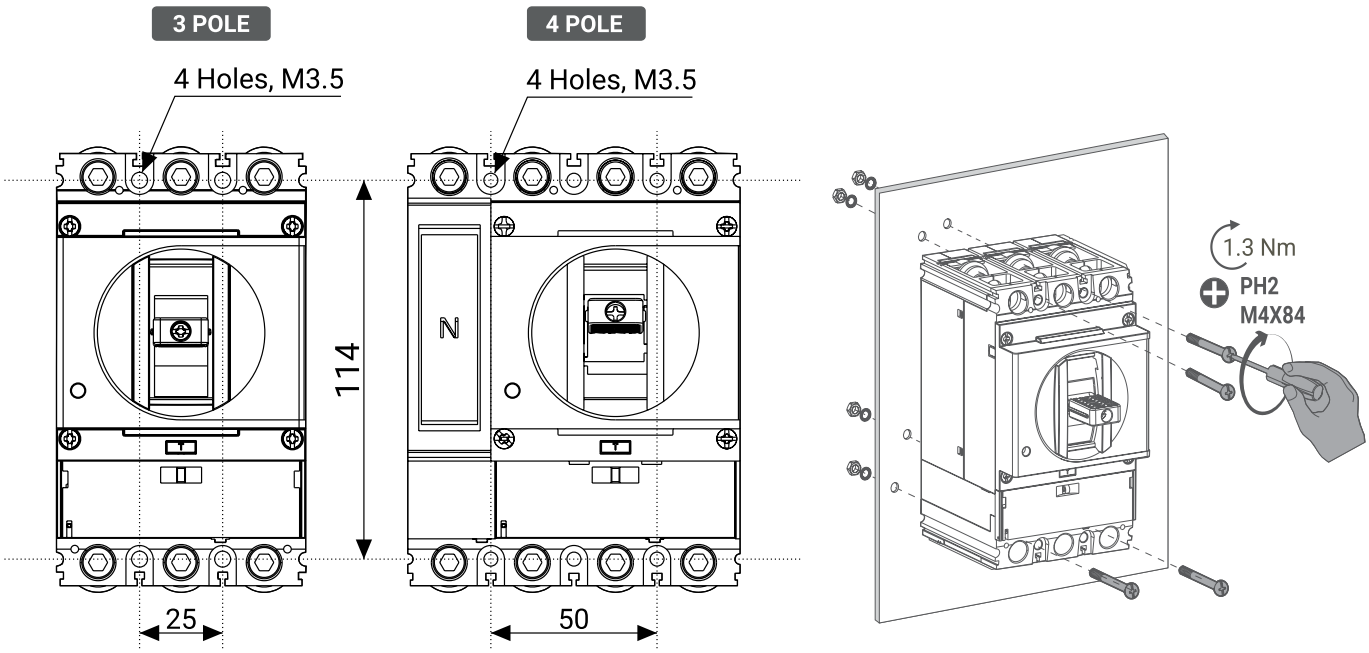

All dimensions are in mm

DZ2 Panel Cutout

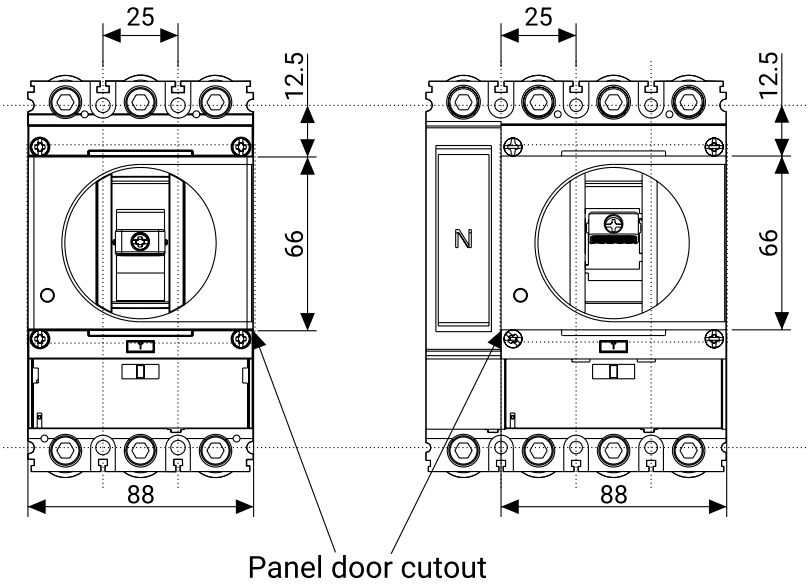

DZ2 Dimensions with Spreader Links

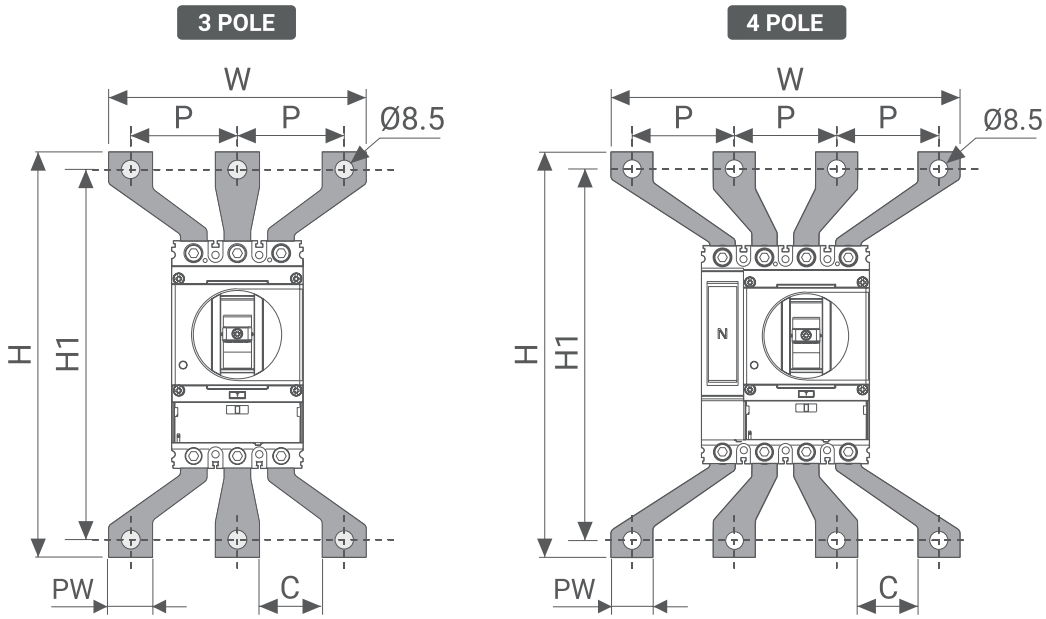

All dimensions are in mm

Variables	Spreader Links 20 mm		Spreader Links 26 mm	
	3P	4P	3P	4P
W	115	160	127	178
H	200	200	200	200
H1	176	176	176	176
PW	25	25	25	25
C	20	20	26	26
P	45	45	51	51

Spreader Thickness = 3mm

DZ4 Overall Dimensions

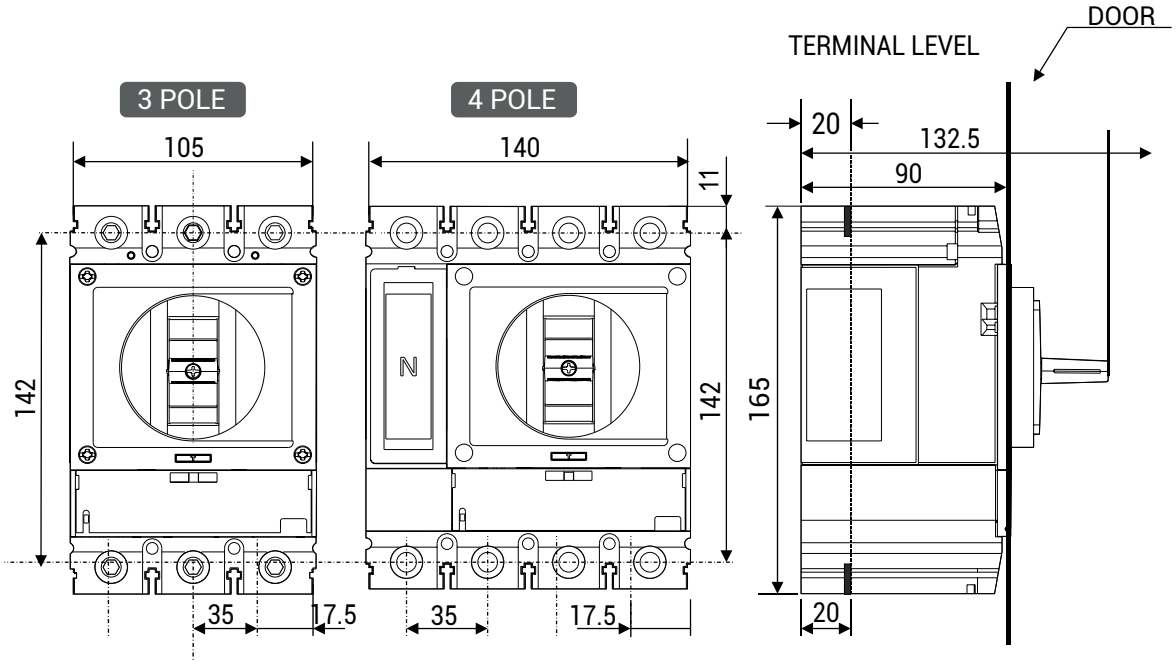

DZ4 Mounting Dimensions

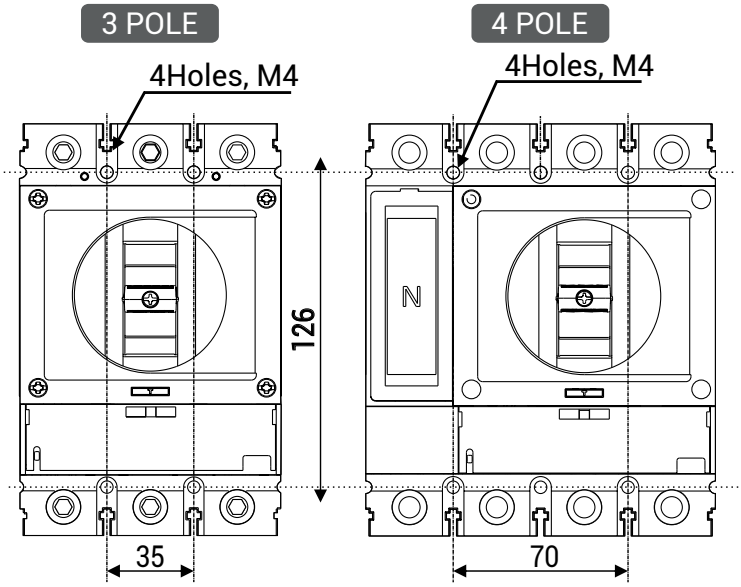

DZ4 Panel Cutout

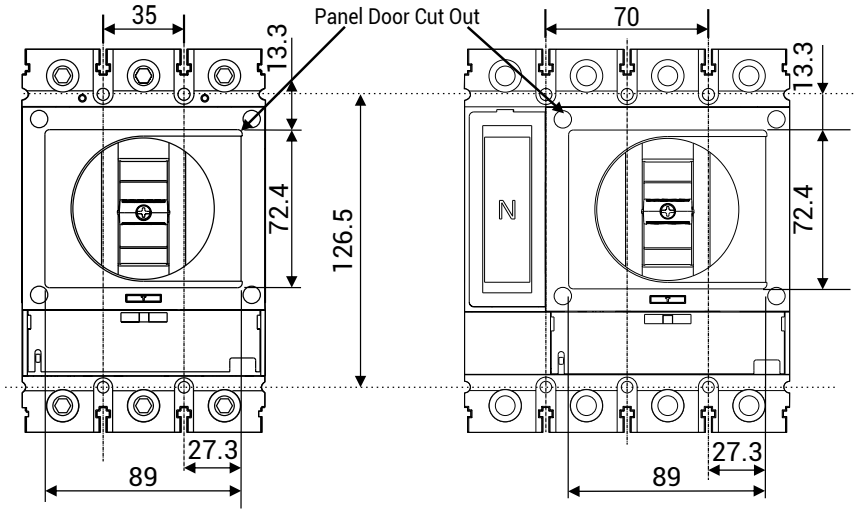

DZ4 Dimensions with Spreader Links

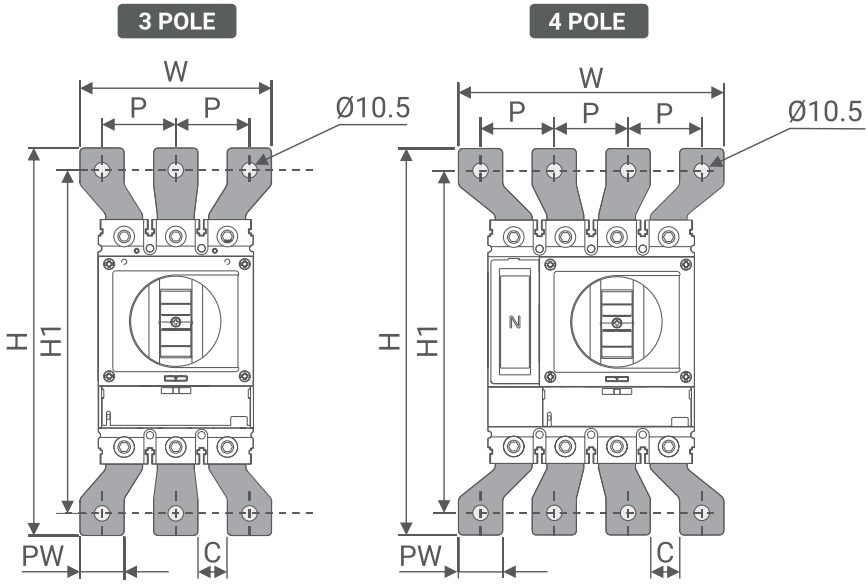

Variables	Spreader Links 26mm	
	3P	4P
W	157	218
H	262	262
H1	228	228
PW	35	35
C	26	26
P	61	61

Spreader links thickness= 4 mm

DZ6 Overall Dimensions

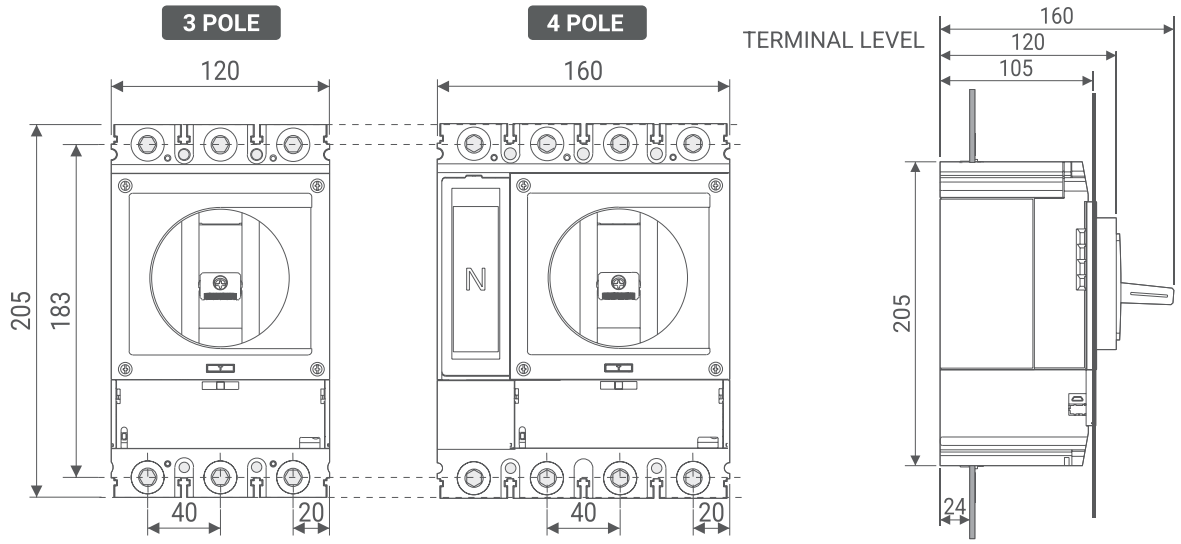

All dimensions are in mm

DZ6 Mounting Dimensions

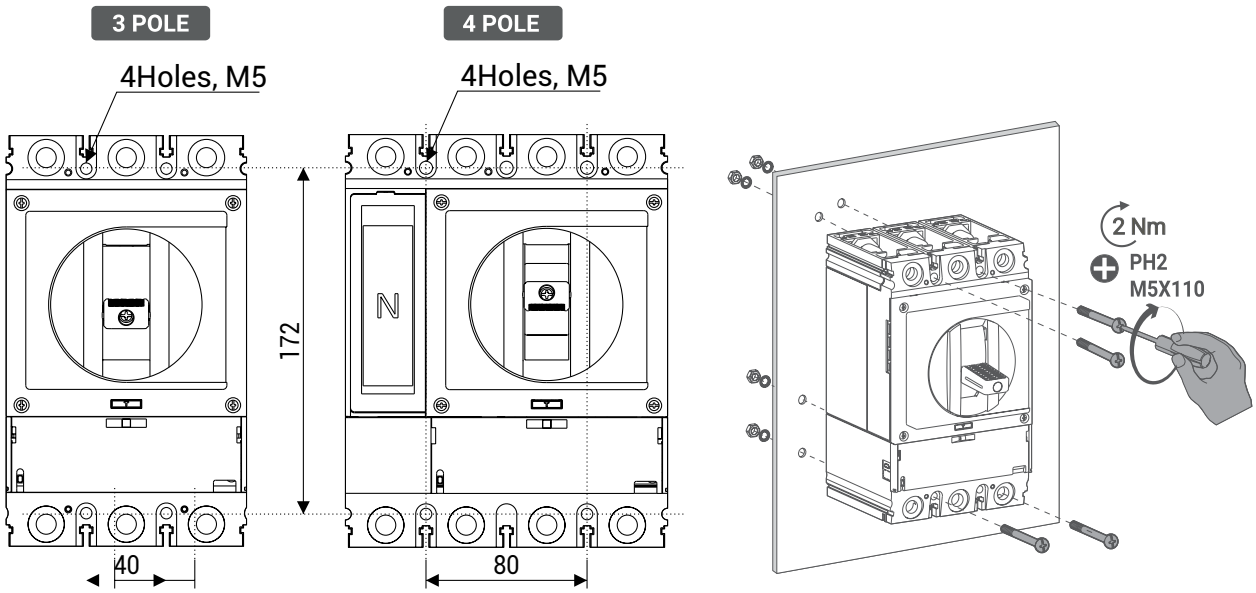

DZ6 Panel Cutout

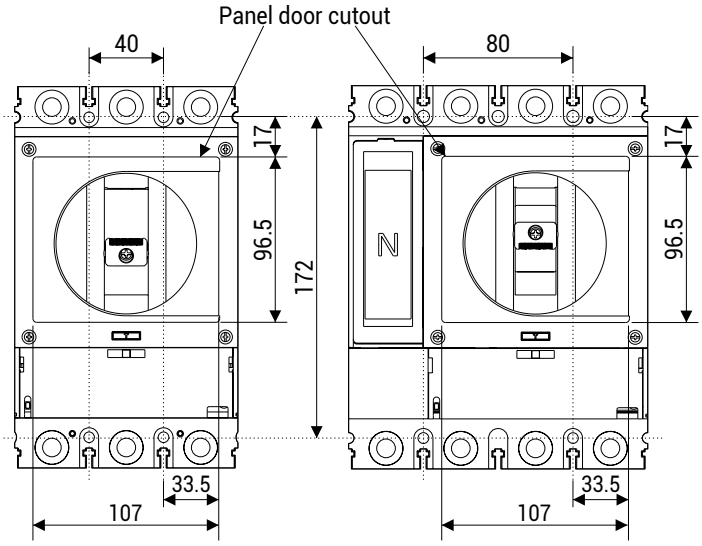

DZ6 Dimensions with Spreader Links

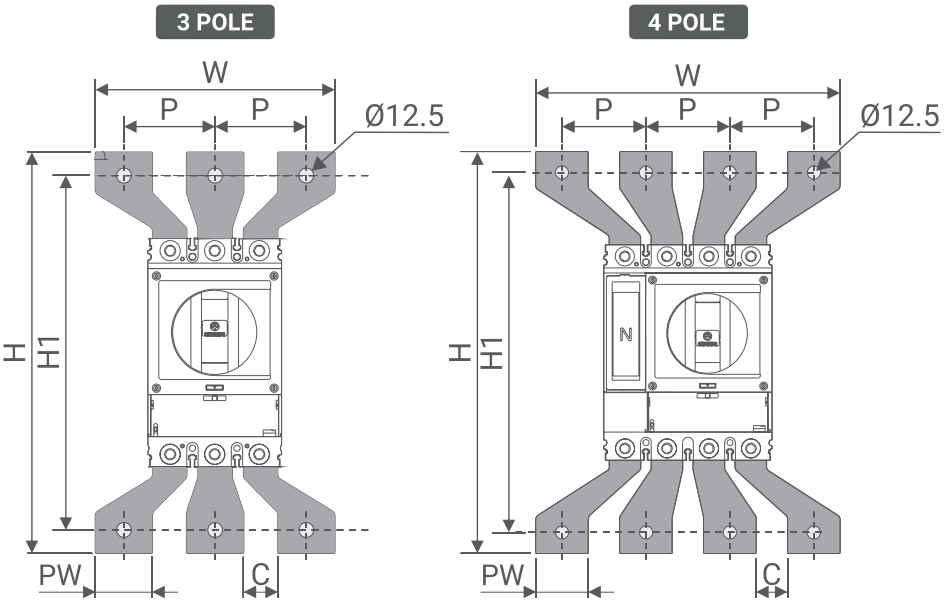

All dimensions are in mm

Variables	Spreader Links 26mm		Spreader Links 30mm	
	3P	4P	3P	4P
W	172	238	210	290
H	313	313	353	383
H1	273	273	313	343
PW	40	40	50	50
C	26	26	30	30
P	66	66	80	80

Spreader links thickness= 5 mm

DZ7 Overall Dimensions

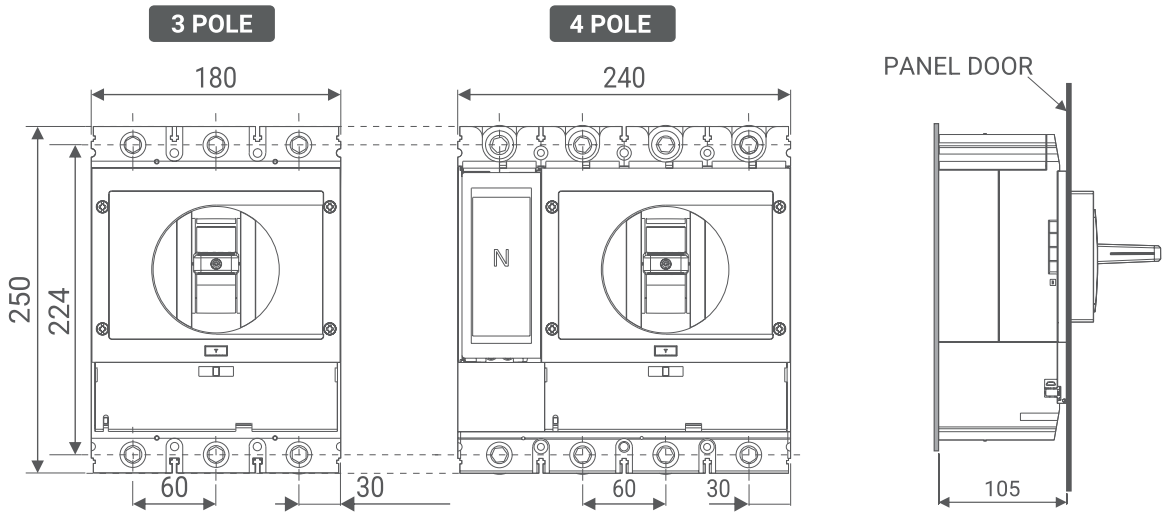

All dimensions are in mm

DZ7 Mounting Dimensions

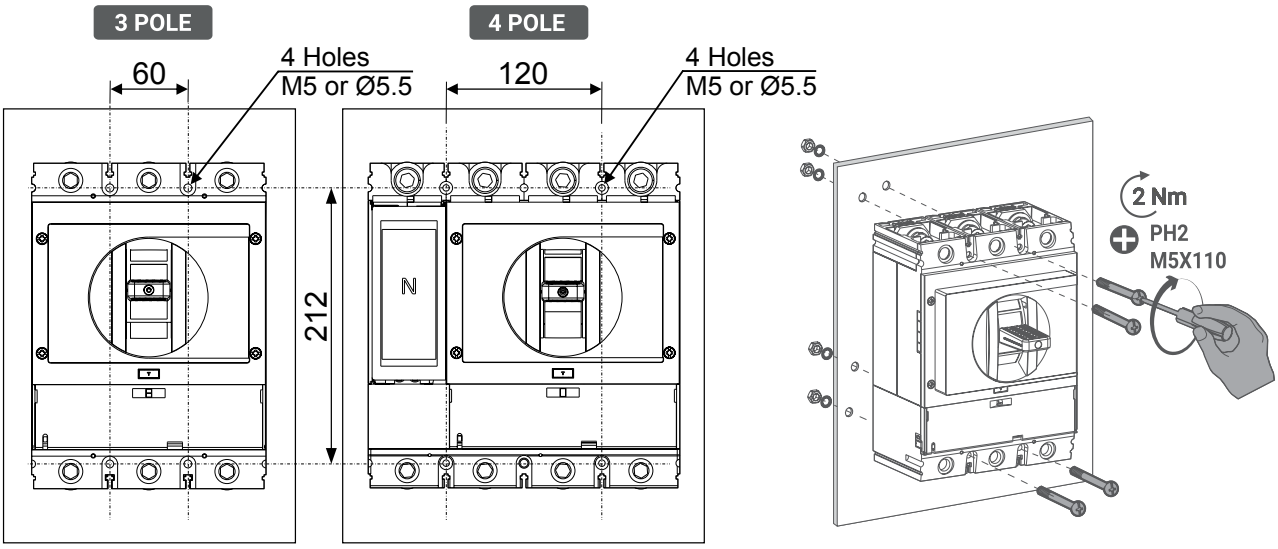

All dimensions are in mm

DZ7 Panel Cutout

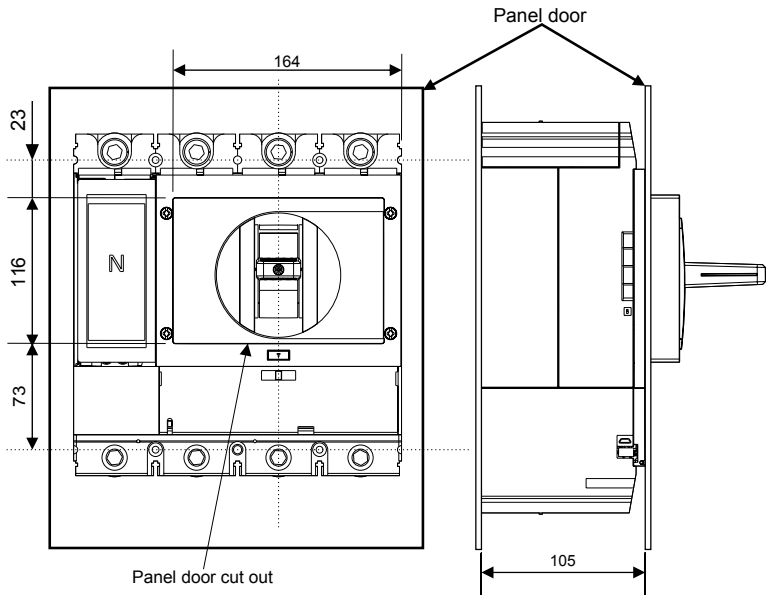

DZ7 Dimensions with Spreader Links

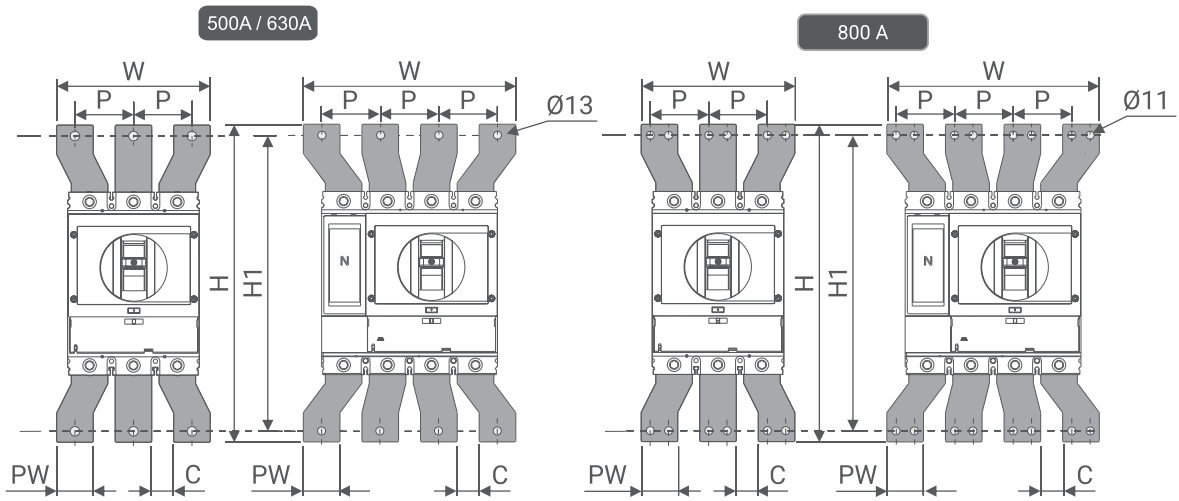

Variables	Spreader Links 630 A		Spreader Links 800 A	
	3P	4P	3P	4P
W	210	290	172	238
H	353	383	313	313
H1	313	343	273	273
PW	50	50	40	40
C	30	30	26	26
P	80	80	66	66

Spreader links thickness= 8 mm for 630 A, 10mm for 800A

DZ7-1000 Overall Dimensions

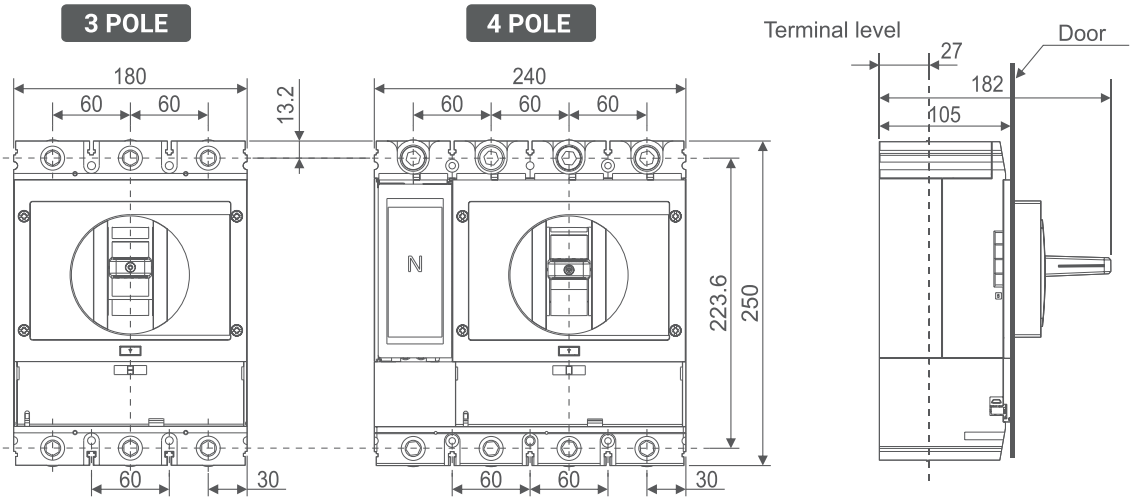

All dimensions are in mm

DZ7-1000 Mounting Dimensions

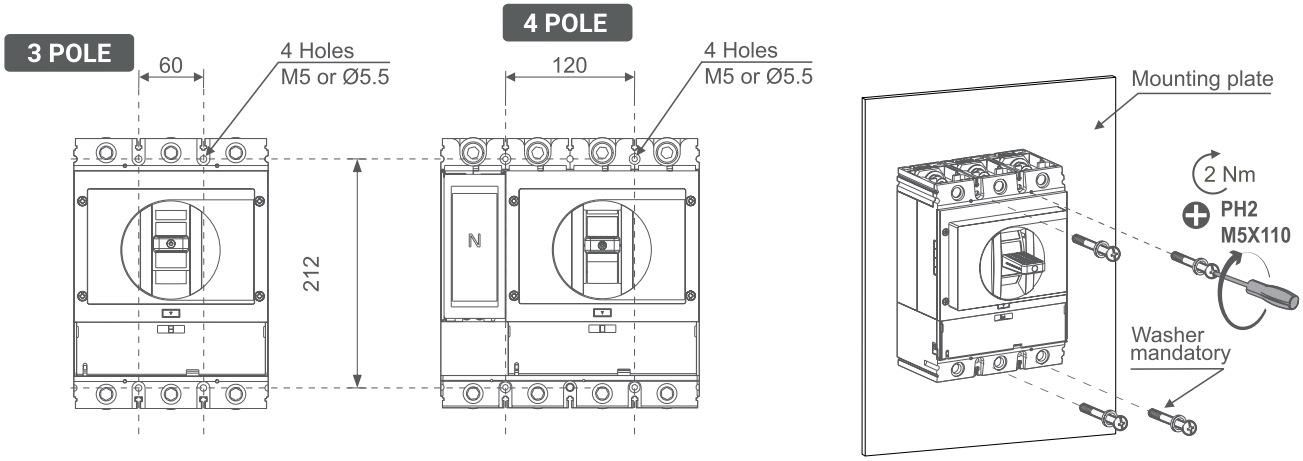

All dimensions are in mm

DZ7-1000 Panel Cutout

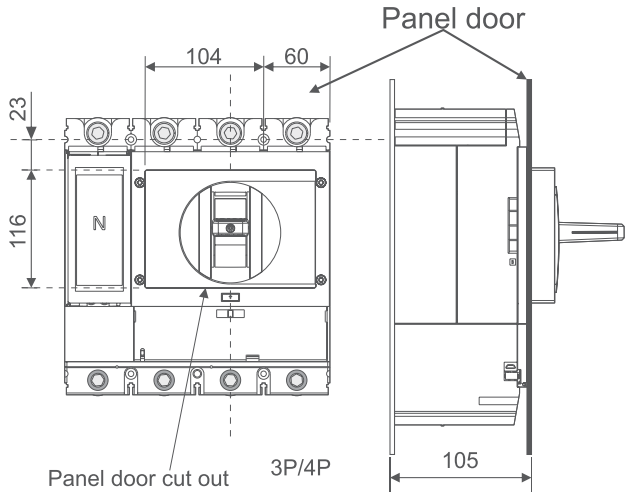

All dimensions are in mm

DZ7-1000 Dimensions with Spreader Links

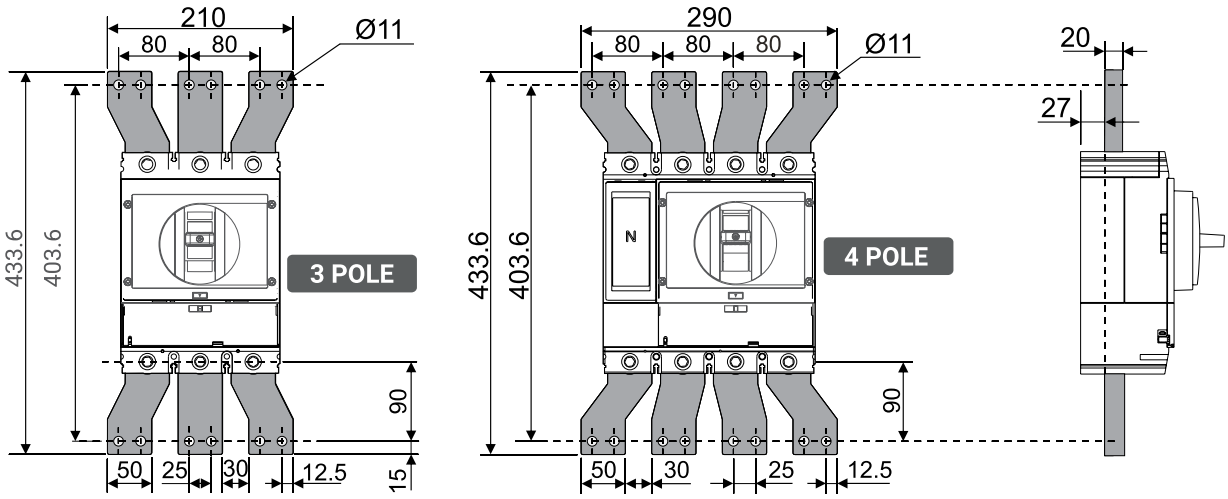

All dimensions are in mm

Rotary Operating Mechanism (ROM)

Direct ROM

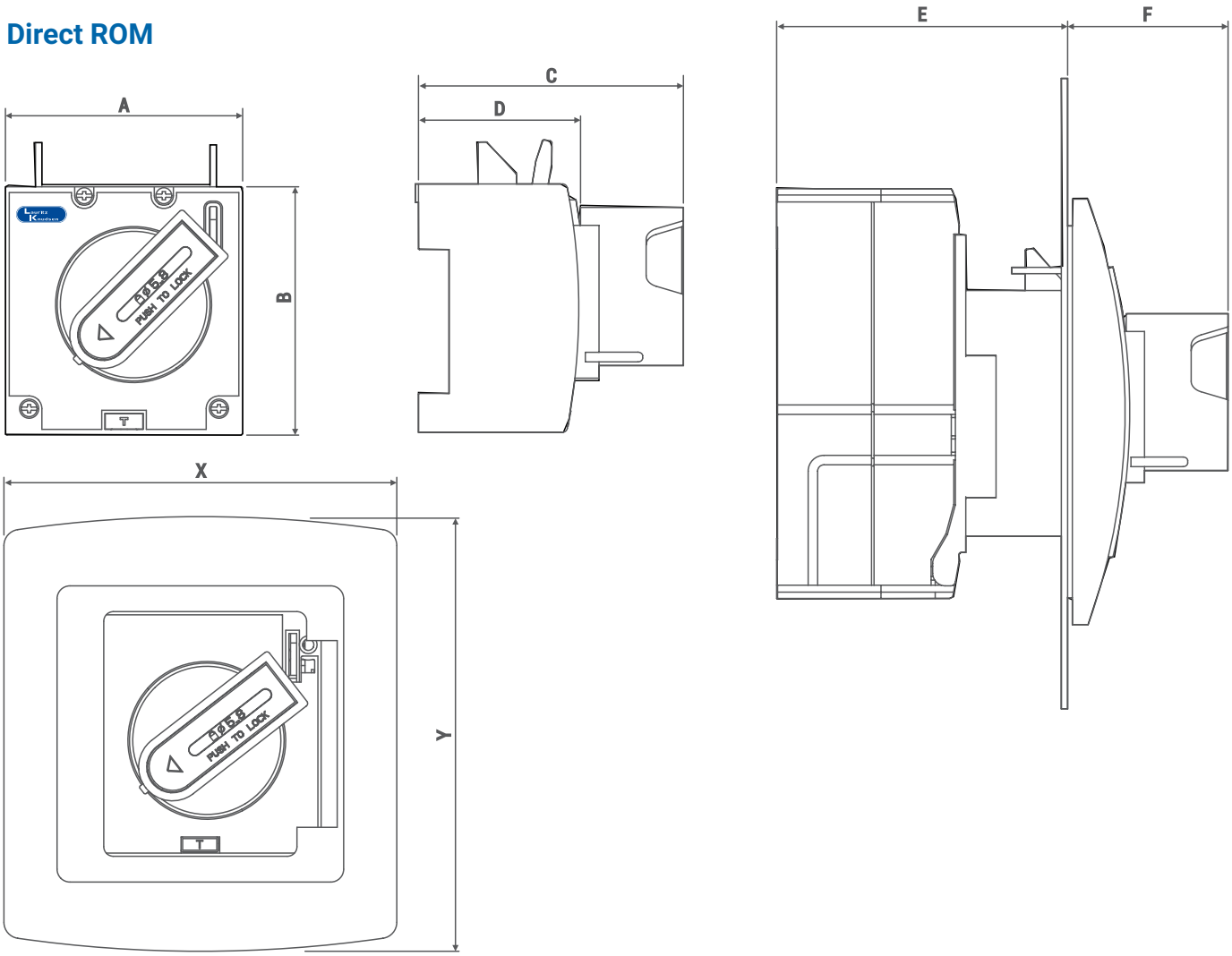

mm	DZ0	DZ1	DZ2	DZ4	DZ6	DZ7
A	74.5	75	75	105	120	180
B	78	78	78	88	113.2	140
C	84.8	90.5	89	104.2	116.2	130.1
D	51.3	56.5	55	64.5	75.6	83.8
E	92.3	100.5	112	134	160	167.3
F	49.5	50	50	60.3	61	63.8
X	122	122	122	135	150	188
Y	135	135	135	137.4	170	190

Rotary Operating Mechanism (ROM)

Extended ROM

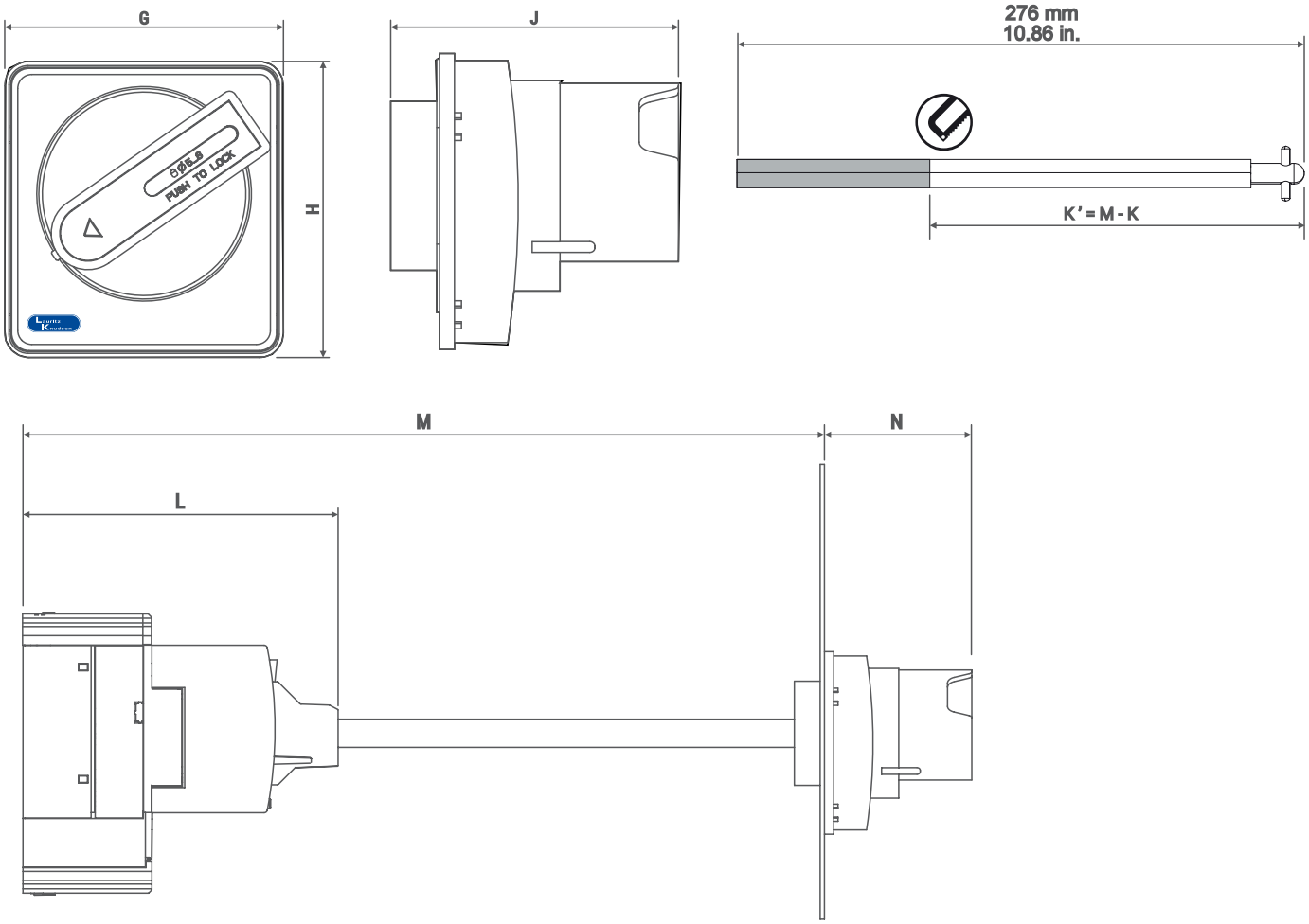

mm	DZ0	DZ1	DZ2	DZ4	DZ6	DZ7
G	80	80	80	80	80	80
H	85	85	85	85	85	85
J	80.6	80.6	80.6	80.6	80.6	80.6
K	94.3	102.5	114.5	133	160.2	172.4
L	139.2	146.9	157.8	179.7	205.7	218.1
M (Min)	163.1	171	174	202.4	229	241.2
M (Max)	367.6	375.5	378.5	406.9	433.5	445.7
N	67	67	67	67	67	67

Panel Cutouts Rotary Handle

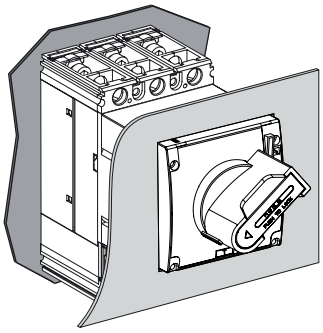

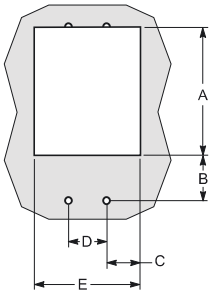

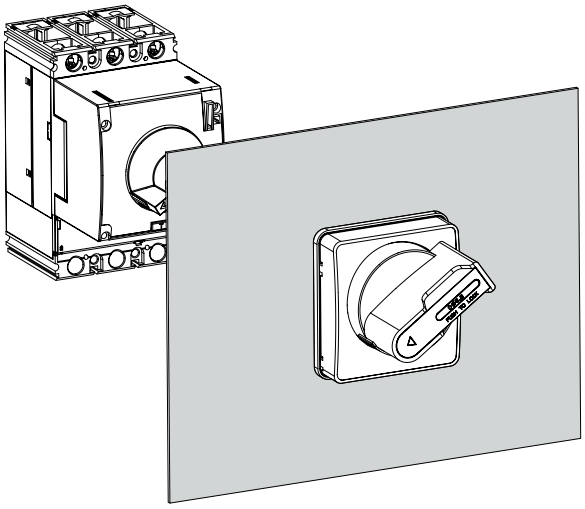

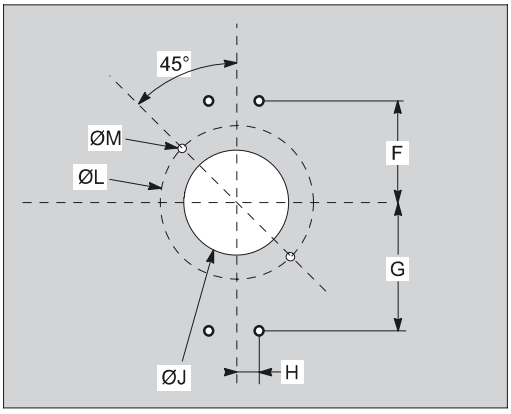

mm/in.	DZO	DZ1	DZ2	DZ4	DZ6	DZ7
A	88	88	88	98	123.3	144
B	5.7	24.5	24.5	27.5	43.3	59
C	32	30	30	42.5	45	51.5
D	25	25	25	35	40	60
E	89	85	85	120	130	163
F	60.5	47.5	47.5	46.5	67	81
G	51.5	66.5	66.5	80.3	105	131.2
H	9.5	10.5	10.5	17.5	19	30
ØJ	51	51	51	51	51	51
ØL	76	76	76	76	76	76
ØM	4.5	4.5	4.5	4.5	4.5	4.5

Plug-in Module

3 Pole

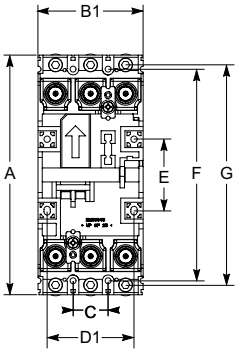

4 Pole

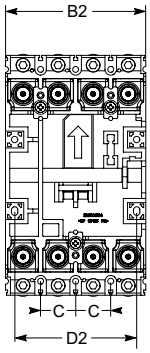

3 Pole/4 Pole

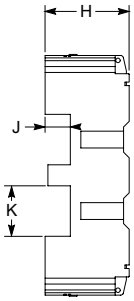

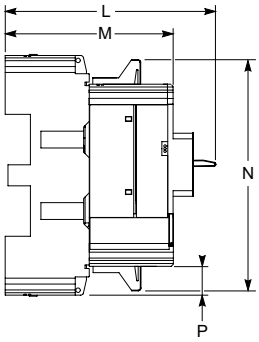

mm/in.	A	B1	B2	C	D1	D2	E	F	G	H	J	K	L	M	N	P
DZ1	171 6.73	75 2.95	100 3.93	25 0.98	62 2.44	87 3.42	51 2.01	151 5.94	157 6.81	60 2.36	18 0.70	36 1.41	150 5.90	120 4.72	166 6.53	20.5 0.80
DZ4	220 8.66	105 4.13	140 5.51	35 1.37	87 3.42	122 4.80	51 2.01	181 7.12	197 7.75	70 2.75	20 0.78	36 1.41	202.5 7.97	160 6.29	201 7.91	27.5 1.08
DZ6	282 11.10	120 4.72	160 6.23	40 1.57	98 3.85	138 5.43	88 3.46		260 10.23	100 3.93			209 8.22	155 6.10	212 8.34	38.5 1.51

3 Pole

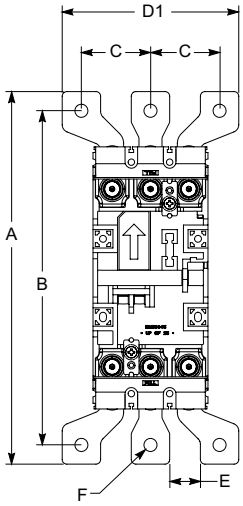

4 Pole

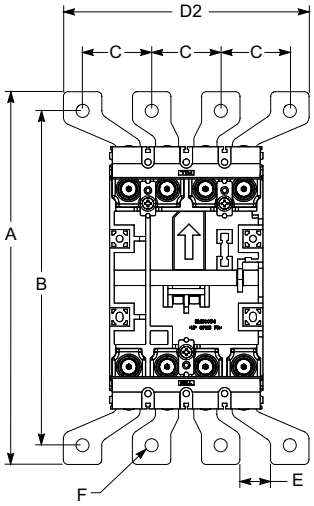

3 Pole / 4 Pole

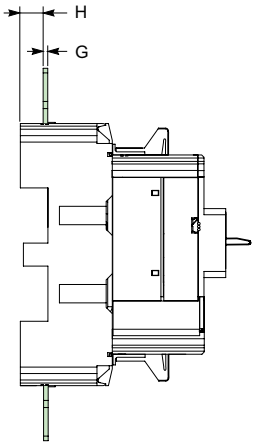

mm/in.	A	B	C	D1	D2	E	F	G	H
DZ1	231.5 9.11	211.5 8.32	61 2.40	147 5.78	208 8.18	151 5.94	Ø 8.5 Ø 0.33	3 0.12	23 0.9
DZ4	317 12.48	283 11.14	61 2.40	157 6.18	218 8.58	151 5.94	Ø 12.5 Ø 0.49	5 0.19	20 0.78
DZ6	430 16.92	390 15.35	80 3.14	210 8.26	290 11.41	181 7.12	Ø 12.5 Ø 0.49	5 0.19	24 0.94

DZ7 Plug-in base

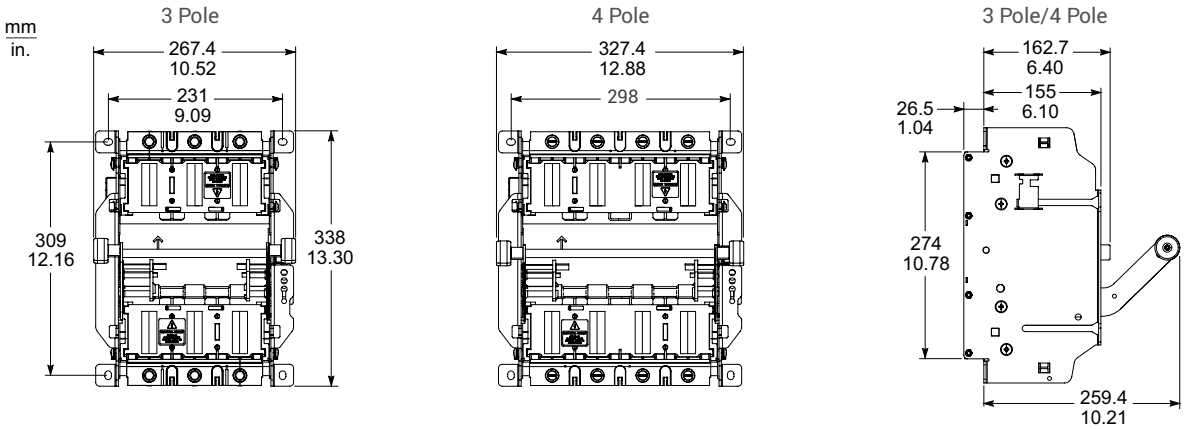

DZ7 Plug-in base with Terminal extension spreaders

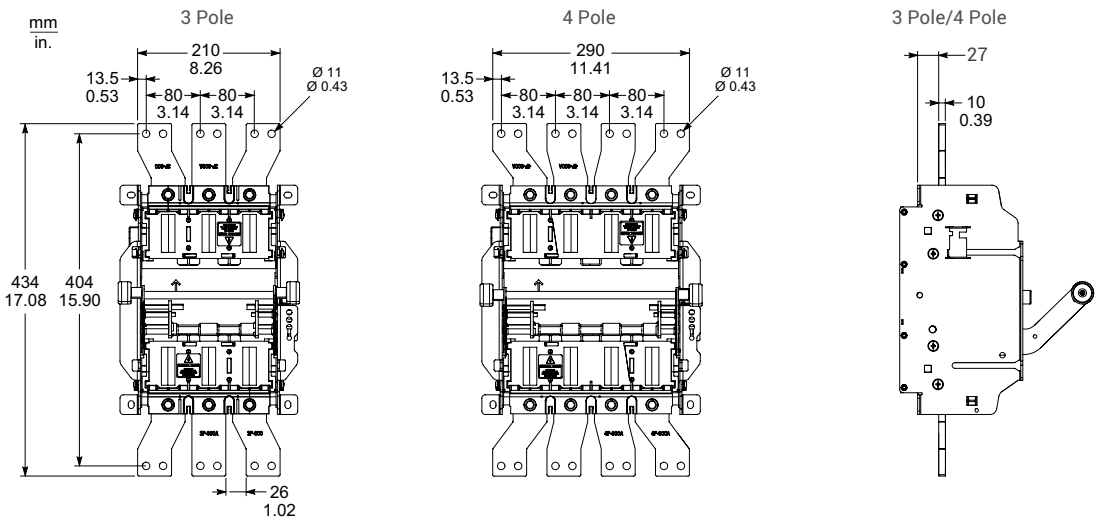

DZ7 Plug-in assembly in different positions

3 Pole/4 Pole

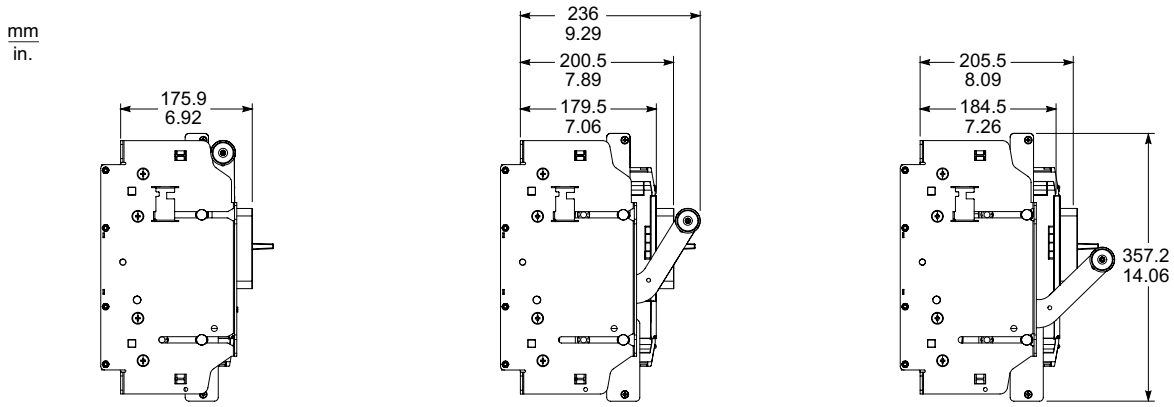

CONNECTED POSITION

DISCONNECTED POSITION

TAKE-AWAY POSITION

DZ Drawout - Fixed Kit

OVERALL DIMENSION - DZ4, DZ6

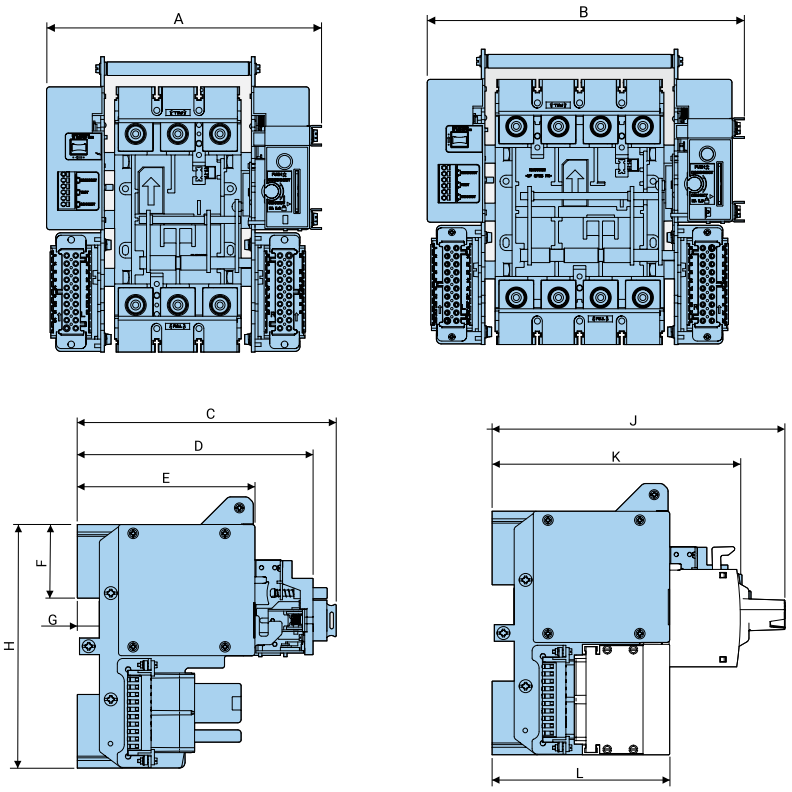

Dimension in mm	DZ4	DZ6
A	228.1	243.1
B	263.1	283.1
C	233.9	237.2
D	213	216.3
E = L	160.5	155
F	66.5	NA
G	18	NA
H	220	282
J	264.6	270.3
K	224.3	229.2

DIMENSION WITH SPREADER LINK

1 DZ4,DZ6
DZ7-630

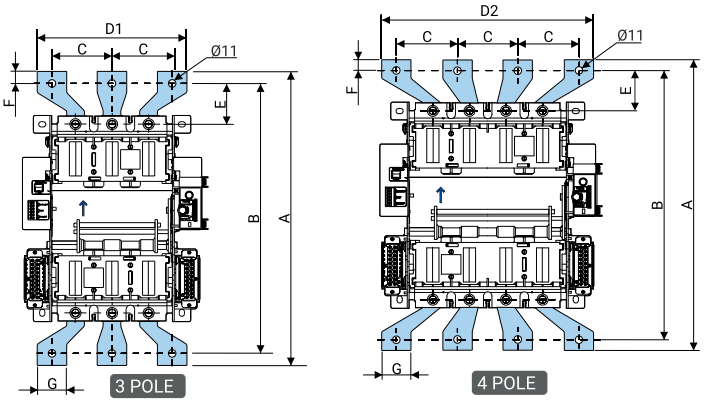

Dimension in mm	DZ4	DZ6	DZ6*
A	317	460	390
B	283	390	350
C	61	80	66
D_1	157	210	172
D_2	218	290	238
E	43	65	45
F	17	20	20
G	35	50	40

* 26mm Clearance between Spreaders

DZ Drawout - Fixed Kit

OVERALL DIMENSIONS - DZ7

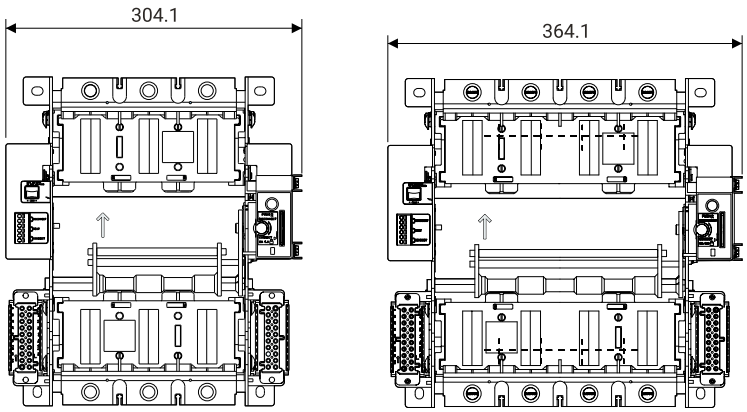

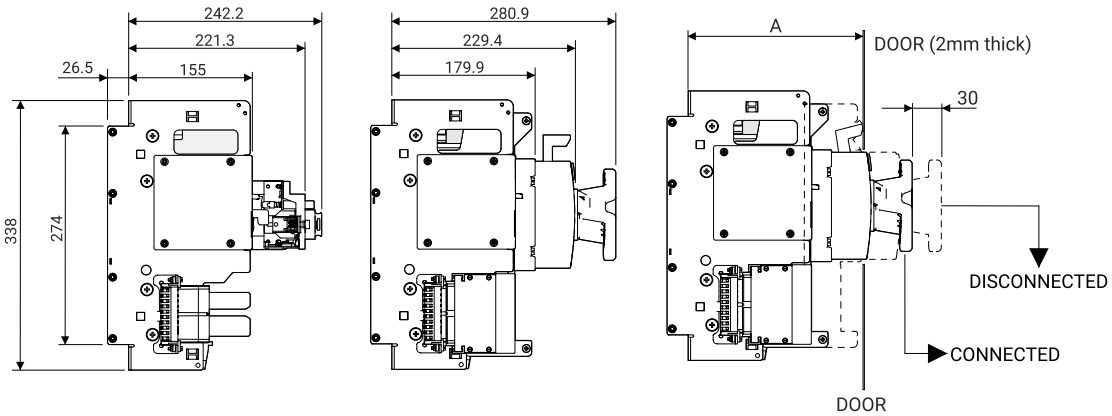

	DZ4	DZ6	DZ7
A(mm)	205	207	212.5

DIMENSION WITH SPREADER LINK

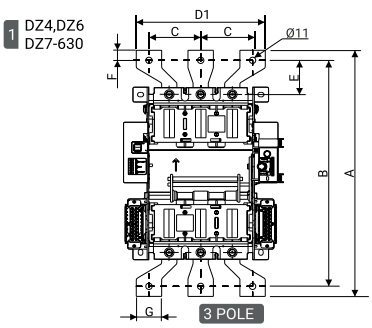

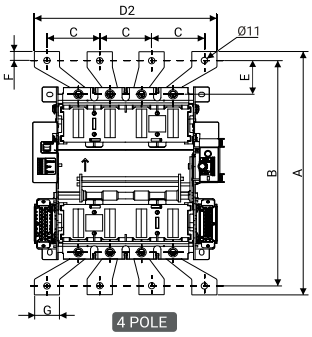

Dimension in mm	DZ4	DZ6	DZ7
A	317	430	519.6
B	283	390	489.6
C	61	80	80
D_1	157	210	210
D_2	218	290	290
E	43	65	90
F	17	20	15
G	35	50	50

* 26mm Clearance between Spreaders

BEZEL ASSEMBLY & DOOR CUTOUT DIMENSION

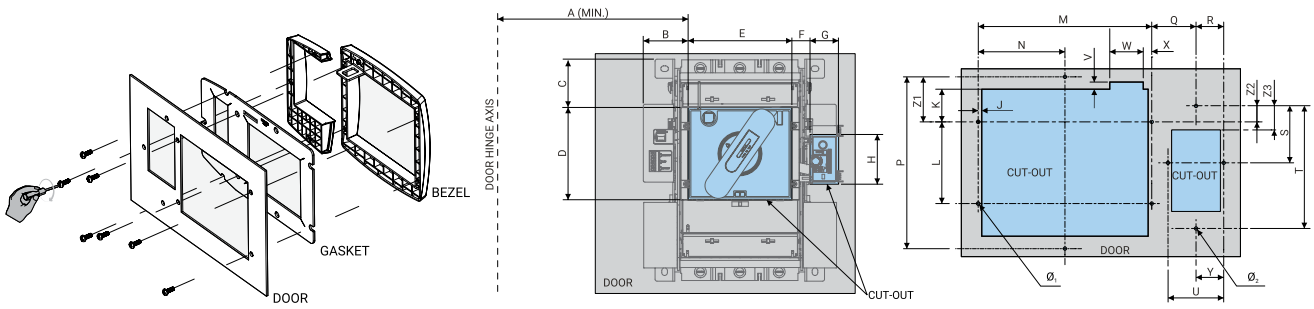

Dimension in mm	DZ4		DZ6		DZ7	
	3P	4P	3P	4P	3P	4P
A (min.)*	170		185		210	
B	56.4	914	53.4	96.4	65.9	130.9
C	52.5		60.7		72	
D	88		130		144	
E	105		123		163	
F	19.7		9.3		23.2	
G	47		47		47	
H	79		79		79	
J	5.1		5		3.5	
K	9.9		22.5		32	
L	78.2		78		80	
M	125.2		140		170	
N	NA		NA		85	
P	NA		NA		168.2	
Q	18.2		21		43.4	
R	39.7		36		27.3	
S	57.3		61		73.3	
T	113		122		120	
U	na		NA		54.6	
V	NA		NA		33	
W	NA		NA		7	
X	NA		NA		5	
Y	8		23		27.3	
$Ø_1$	3.3		3.3		3.3	
$Ø_2$	7.3		7.3		7.3	
Z1	-		-		44.1	
Z2	-		20.9		15.6	
Z3	-		13		23.4	

Mechanical Interlocking Kit - Front Slider

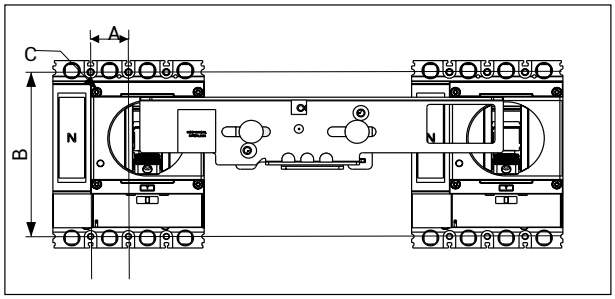

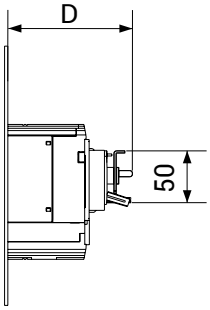

	DZ1	DZ2	DZ4
A	25	25	35
B	114	114	126
C	M3.5	M3.5	M4
D	98.8	114.6	123.8

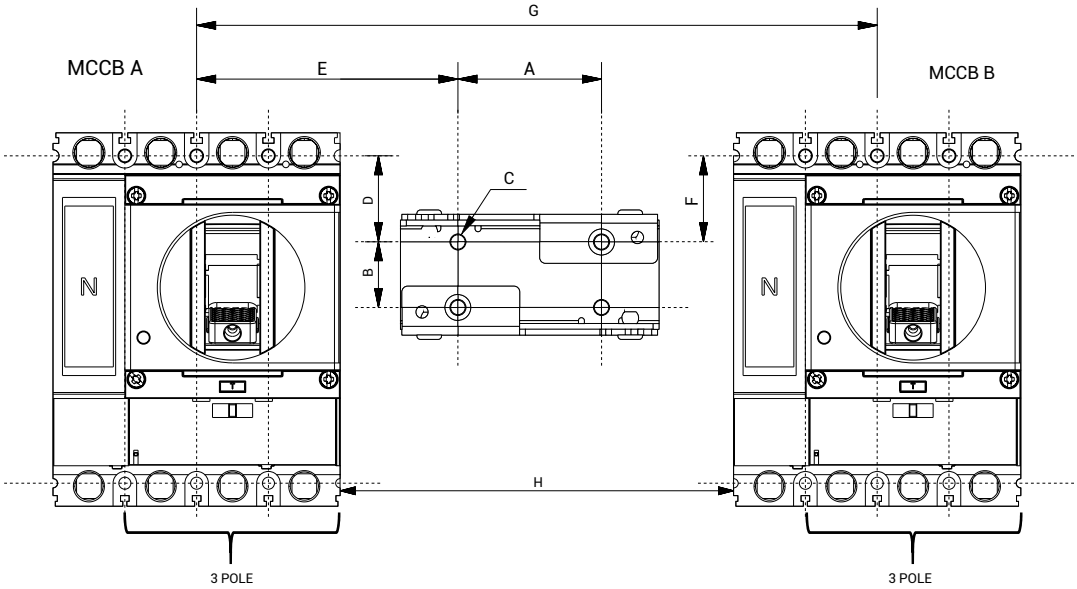

	DZ1-DZ1	DZ2-DZ2	DZ4-DZ4	DZ2-DZ4	DZ4-DZ2
A	50				
B	22.8				
C	M5				
D	30		34	30	34
E	90	91	99	91	99
G	235	237	245	237	245
H	135	137	105	117	125
F	30		34	34	30

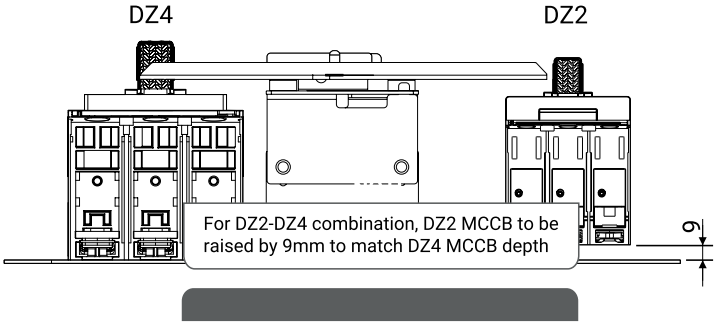

MCCB INTERLOCKING MATRIX

MCCB		B		
		DZ1	DZ2	DZ4
A	DZ1	✓		
	DZ2		✓	✓
	DZ4		✓	✓

Mechanical Interlocking Kit - Rear Base Plate with Cable

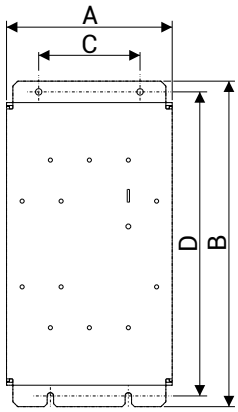

BASEPLATE A

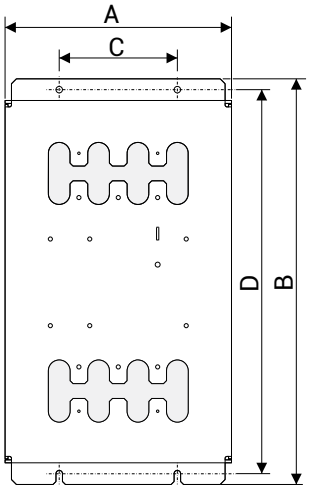

BASEPLATE B

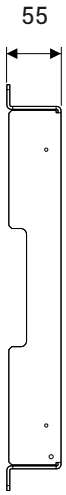

	DZ1	DZ2	DZ4	DZ6
DZ1	✓			
DZ2		✓	✓	✓
DZ4		✓	✓	✓
DZ6		✓	✓	✓

CABLIE SELECTION MATRIX

		DZ1		DZ2		DZ4		DZ6	
		A	B	A	B	A	B	A	B
DZ1	A	L	L						
	B		M						
DZ2	A			L	L	L	M	L	L
	B				M	L	M	M	H
DZ4	A					L	M	L	M
	B						H	M	H
DZ6	A							M	H
	B								H

	OVERALL DIMENSIONS					
	BASEPLATE A			BASEPLATE B		
	DZ1/2	DZ4	DZ6	DZ1/2	DZ4	DZ6
A	100	160	170	164	213	230
B	222	264	334	282	349	412
C	70	94	104	75	105	120
D	204	242	312	264	327	390

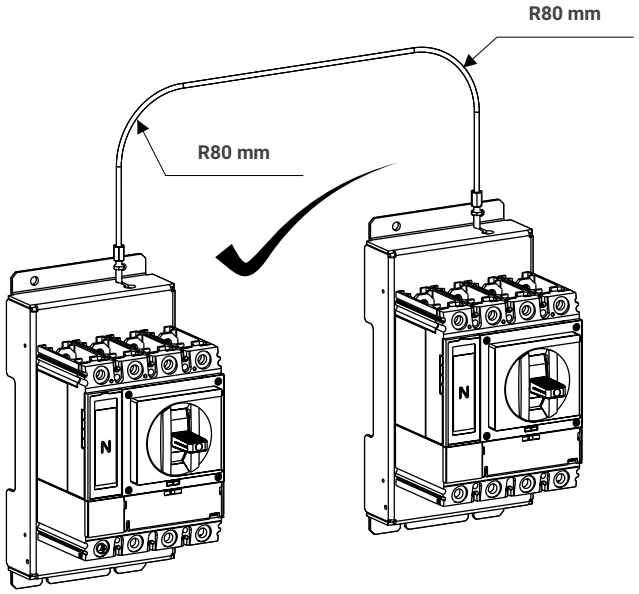

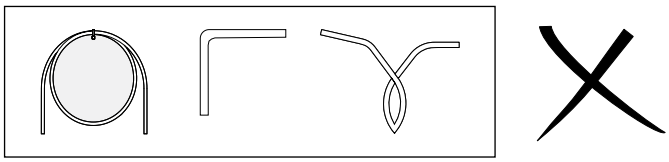

1. No sharp bending or looping/bundling of cable during or after assembly
2. Ensure no free hanging of cable.
3. Cable should be supported appropriately at required locations.
4. Ensure no sagging of cable.

All dimensions are in mm

OVERALL DIMENSIONS

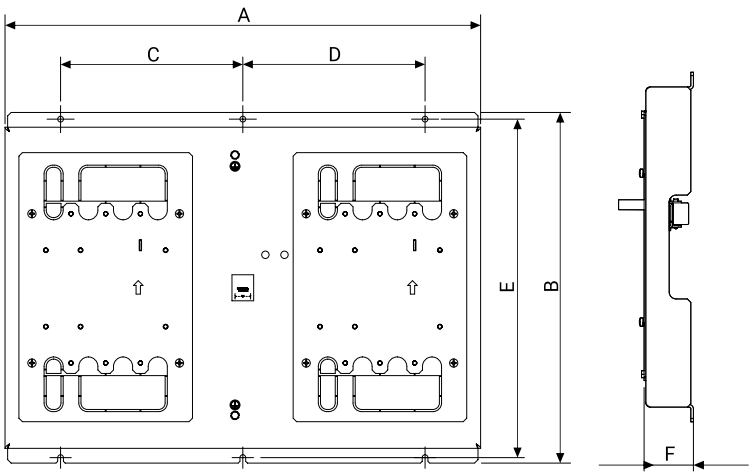

MCCB INTERLOCKING MATRIX

	DZ4	DZ6
DZ4	✓	✓
DZ6	✓	✓

	OVERALL DIMENSIONS	
	DZ4	DZ6
A	455	548
B	339	404
C	170	210
D	170	210
E	323	390
F	57	57

Mechanical Interlocking with Key Locks

OVERALL DIMENSIONS

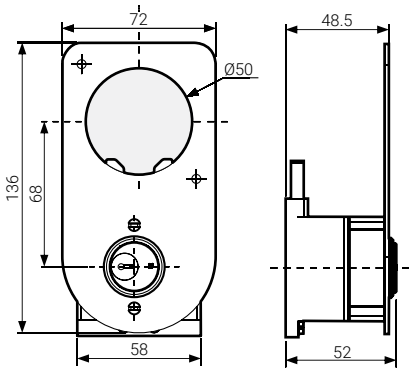

DOOR CUTOUT DETAILS

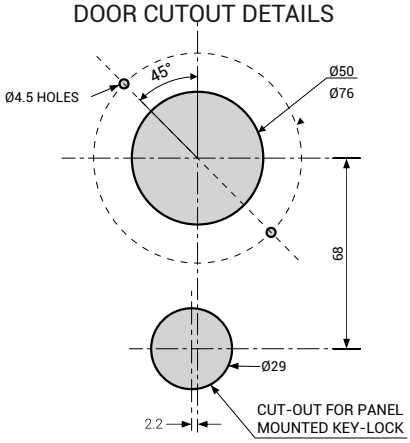

Minimum panel depth for Rotory Operating Mechanism with panel mounted key lock

OVERALL DIMENSIONS

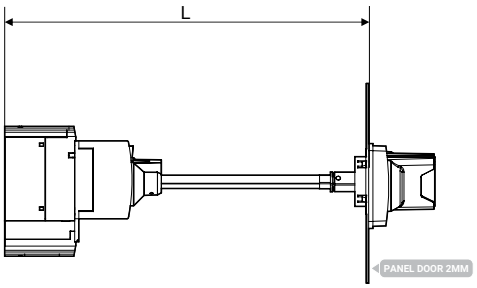

MCCB	Length of shaft (LS)	Min Panel Depth
DZ0	L-96	220
DZ1	L-102-5	225
DZ2	L-114.5	240
DZ4	L-132	260

OVERALL DIMENSIONS

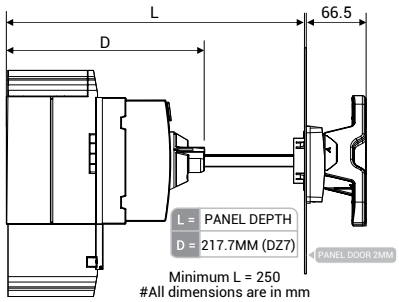

MCCB	Length of shaft (LS)	Min Panel Depth
DZ6	L-160.2	272
DZ7	L-172.4	284

Electrical Operating Mechanism

DZ1

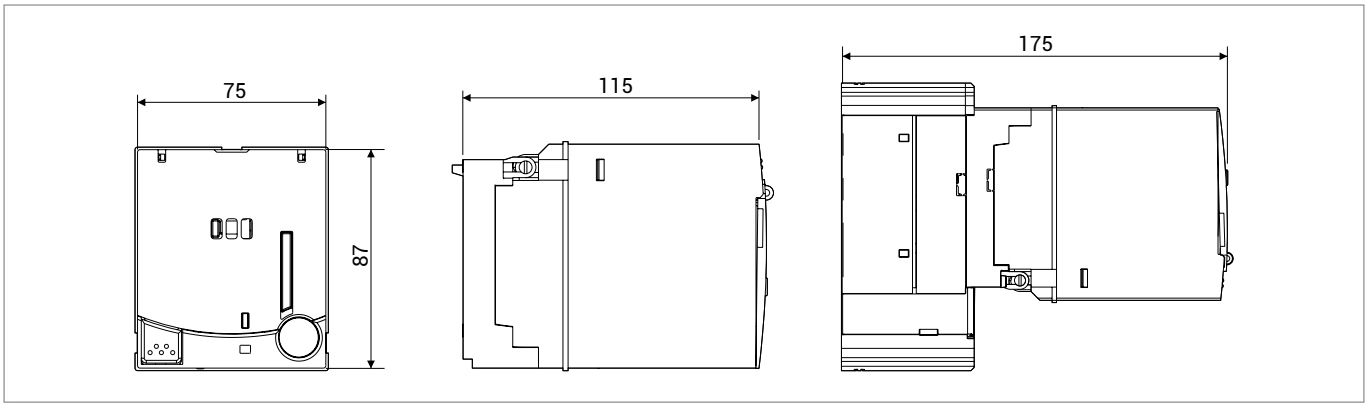

DZ2

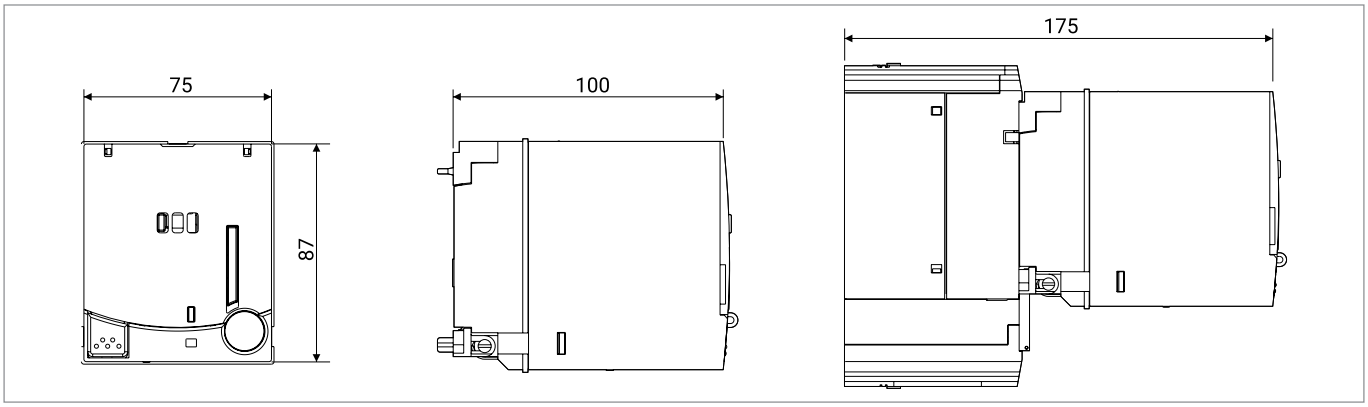

DZ6

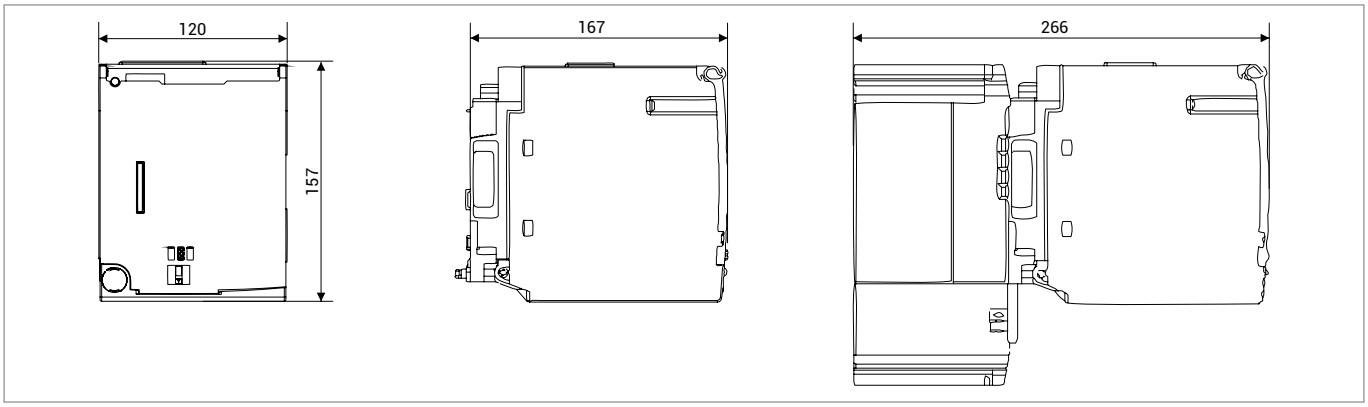

DZ7

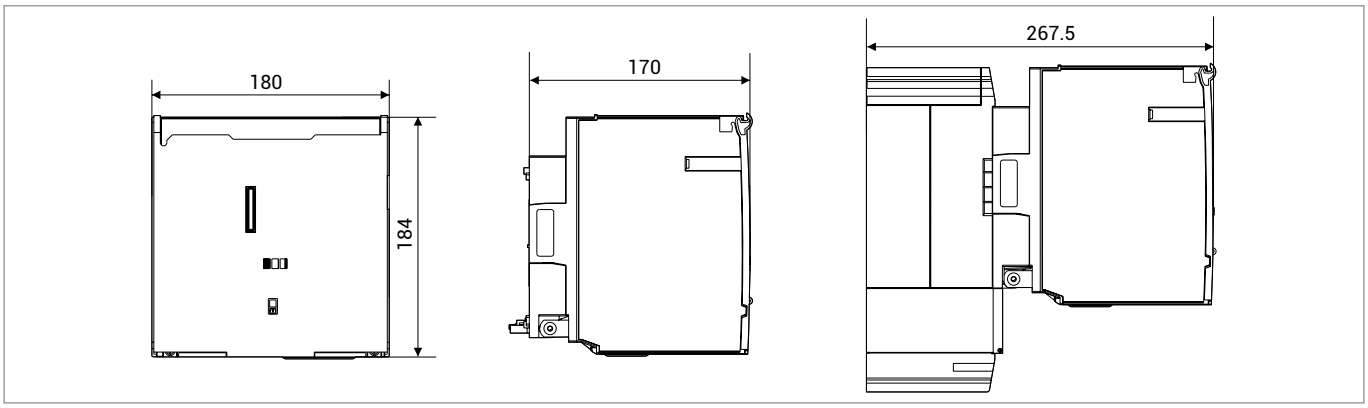

Mounting Dimensions

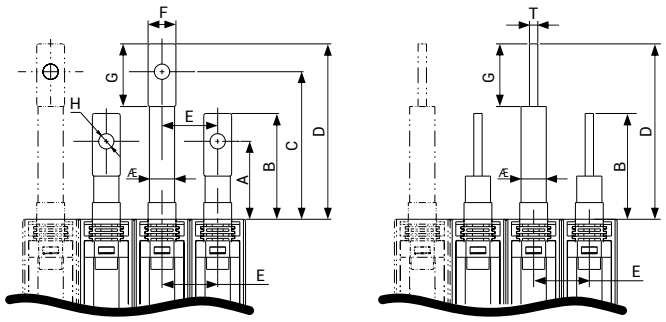

	DZ1	DZ2	DZ4	DZ6	DZ7
	160A	160A	250A	400A	630/800A
A5	7.34	9.54	4.65	66	4
B6	8.36	0.55	5.67	68	9
C1	07.3	99.5	94.6	106	114
D1	18.3	110.51	05.6	126	139
AE	9.59	.5	13	18	22
E2	52	53	5	40	60
F1	21	21	8	20	30
G2	25	52	5	45	55
H	6.5	6.5	9	11	12.5
T3		36		6	10

Mounting Plate for DZ1/2

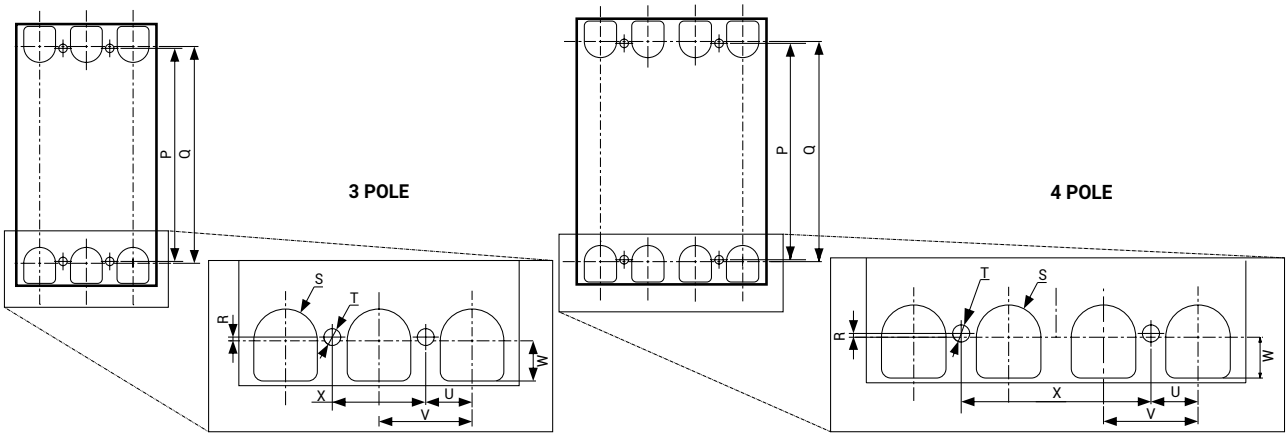

Mounting Plate Dimensions

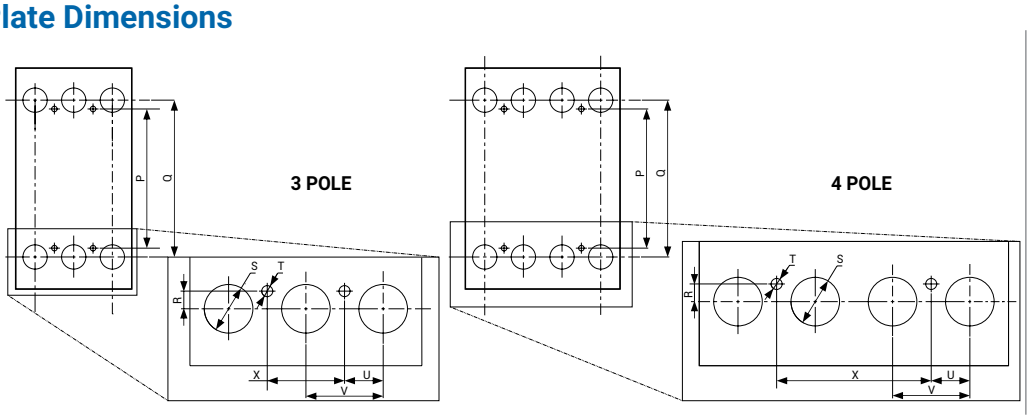

		Without Plug-in		With Plug-in	
		DZ1/2	DZ4	DZ1/2	DZ4
		160A	250A	160A	250A
P		114	126	151	181
Q		116	142	157	197
R		1	8	3	8
S		R 8.5	22	R17	22
T		4.5	5	4.5	5
U		12.5	17.5	12.5	17.5
V		25	35	25	35
W		10.8	-	10.8	-
X	3 Pole	25	35	25	35
	4 Pole	50	70	50	70

Mounting Plate Dimensions

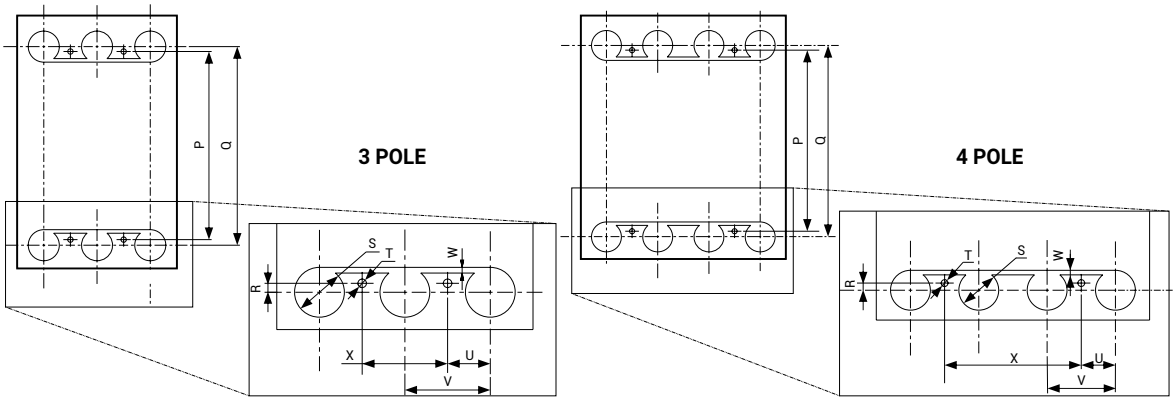

MOUNTING PLATE DMENSIONS

		Without Plug-in		With Plug-in
		DZ6	DZ7	DZ6
		400A	630A/800A	400A
P		172	212	88
Q		183.4	223.8	260
R		5.7	5.9	86
S		25	35	25
T		5.5	6	5.5
U		20	30	9
V		40	60	40
W		3	4	3
X	3 Pole	40	60	98
	4 Pole	80	120	138

All Dimension are in mm

3 POLE	4 POLE	Plugin
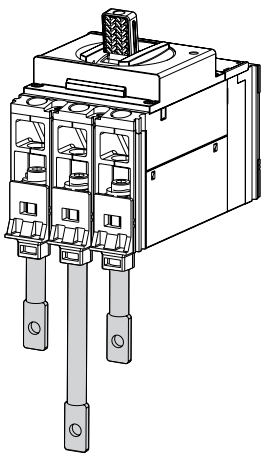	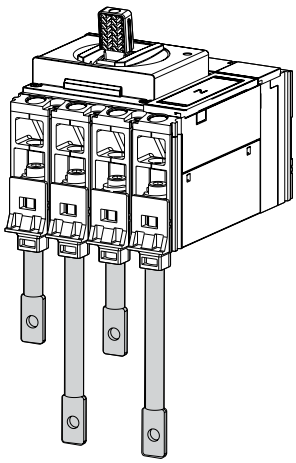	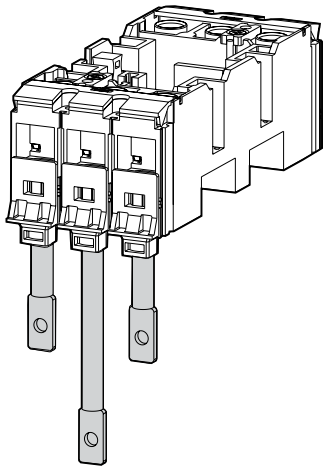

Terminal Shrouds - Short & Long

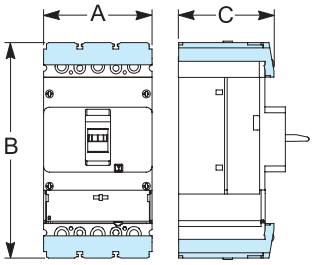

Short Terminal Shroud

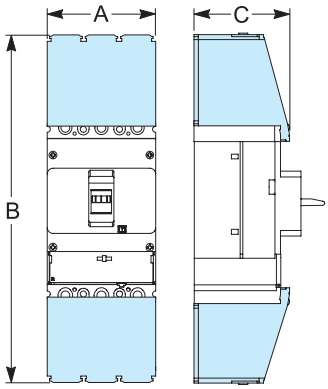

Long Terminal Shroud

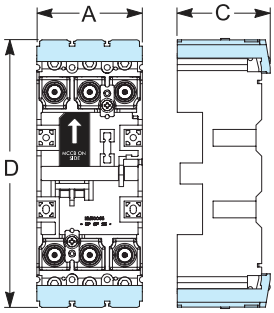

Short Terminal Shroud

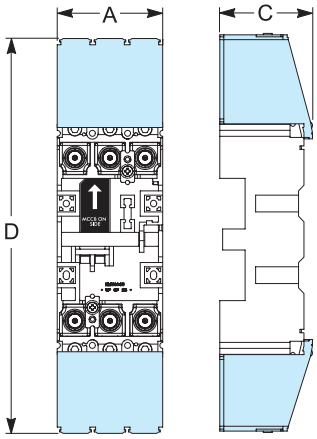

Long Terminal Shroud

mm	Configuration	Pole	A	B	C	D
DZ0	Short Terminal Shroud	3P	76.6	150.8	63.7	-
		4P	101.6	150.8	63.7	-
	Long Terminal Shroud	3P	76.6	235	63.7	-
		4P	101.6	235	63.7	-
DZ1/DZ2	Short Terminal Shroud	3P	76.6	150.8	63.7	191.8
		4P	101.6	150.8	63.7	191.8
	Long Terminal Shroud	3P	76.6	235	63.7	-
		4P	101.6	235	63.7	-
DZ4	Short Terminal Shroud	3P	105	179	90.5	234
		4P	140	179	90.5	234
	Long Terminal Shroud	3P	105	305	90.5	-
		4P	140	305	90.5	-
DZ6	Short Terminal Shroud	3P	120	221	104.4	298
		4P	160	221	104.4	298
	Long Terminal Shroud	3P	120	345	104.4	-
		4P	160	345	104.4	-
DZ7	Short Terminal Shroud	3P	180	265.4	103.6	353.4
		4P	240	265.4	103.6	353.4
	Long Terminal Shroud	3P	180	390	103.6	-
		4P	240	390	103.6	-

Electrical Standard Products (ESP) Offices

HEAD OFFICE

Lauritz Knudsen Electrical & Automation, A/600, Shil-Mahape Road, TTC Industrial Area, MIDC Thane, Navi Mumbai, 400 710, Maharashtra.
Tel: 022-6722 6300 | **Fax:** 022-6705 1112 | **e-mail:** CIC@LK-EA.com

BRANCH OFFICES

Lauritz Knudsen Electrical & Automation
C-201, The First Commercial Complex,
B/S Keshavbaug Party Plot, Vastrapur,
Ahmedabad - 380 015
Phone No: 022-6932 7800
e-mail: CIC@LK-EA.com

Lauritz Knudsen Electrical & Automation
Shri Daneshwari, 1st Floor,
Plot No. 17, 2nd Cross, Near Old Income
Tax Office Road, Vidyanagar,
Hubballi - 580 021
Phone No: 022-6932 7800
e-mail: CIC@LK-EA.com

Lauritz Knudsen Electrical & Automation
No.10, Fortuna Towers, 2nd Floor,
Rana Pratap Marg, Near NBRI,
Lucknow - 226 001
Phone No: 022-6932 7800
e-mail: CIC@LK-EA.com

Lauritz Knudsen Electrical & Automation
A06/A07, Second Floor,
Grand Chandra Complex, Frazer Road
Patna - 800 001
Phone No: 022-6932 7800
e-mail: CIC@LK-EA.com

Lauritz Knudsen Electrical & Automation
Wework Central, #36 Infantry Road,
Bengaluru - 560 001
Phone No: 022-6932 7800
e-mail: CIC@LK-EA.com

Lauritz Knudsen Electrical & Automation
AWFIS Space Solutions, Prestige Phoenix,
4th floor, 1405, Umanagar, Begumpet,
Hyderabad - 500 016
Phone No: 022-6932 7800
e-mail: CIC@LK-EA.com

Lauritz Knudsen Electrical & Automation
El Dorado Building, 3rd Floor, 6,
Venkatraman Street, Chinna Chokkikulam,
Madurai - 625 002
Phone No: 022-6932 7800
e-mail: CIC@LK-EA.com

Lauritz Knudsen Electrical & Automation
UrbanWrk, 5th Floor, Sai Radhe,
Raja Bahadur Mill Road, Behind Hotel
Grand Sheraton, Sangamwadi
Pune - 411 001
Phone No: 022-6932 7800
e-mail: CIC@LK-EA.com

Lauritz Knudsen Electrical & Automation
Work loop Unit-612, 6th Floor,
Esplanade One, Rasulgarh,
Bhubaneswar - 751 010
Phone No: 022-6932 7800
e-mail: CIC@LK-EA.com

Lauritz Knudsen Electrical & Automation
Workie, 214 - 2nd Floor,
Apollo Premier, PU-4,
Scheme No. 54, Vijay Nagar Square,
Indore - 452 010
Phone No: 022-6932 7800
e-mail: CIC@LK-EA.com

Lauritz Knudsen Electrical & Automation
Bestech Business Park,
Tower - A, 2nd floor, Sector - 66
Mohali - 160059
Phone No: 022-6932 7800
e-mail: CIC@LK-EA.com

Lauritz Knudsen Electrical & Automation
Office No. 211 & 212, Pithalia Plaza,
KK Road, Near Fafadih Chowk,
Raipur - 492 001
Phone No: 022-6932 7800
e-mail: CIC@LK-EA.com

Lauritz Knudsen Electrical & Automation
801 Word Level-8, No. 28,
SIDCO Industrial Estate, Guindy,
Chennai - 600 032
Phone No: 022-6932 7800
e-mail: CIC@LK-EA.com

Lauritz Knudsen Electrical & Automation
4th Floor, Signature Elite,
J7, Govind Marg,
Jaipur - 302 004
Phone No: 022-6932 7800
e-mail: CIC@LK-EA.com

Lauritz Knudsen Electrical & Automation
TC II, Tower B, PRIMA BAY Gate No. 5,
Saki Vihar Road Powai,
Mumbai - 400 072
Phone No: 022-6932 7800
e-mail: CIC@LK-EA.com

Lauritz Knudsen Electrical & Automation
DevX 4th Floor, A Wing, Om 9 Square,
150 Ft Ring Road, Near Nana Mava Circle,
Opp Silver Heights,
Rajkot - 360 001
Phone No: 022-6932 7800
e-mail: CIC@LK-EA.com

Lauritz Knudsen Electrical & Automation
Playworkz Coworking Space
43 & 44, 3rd Cross,
Bharathy Colony, Peelamedu,
Coimbatore - 641 004
Phone No: 022-6932 7800
e-mail: CIC@LK-EA.com

Lauritz Knudsen Electrical & Automation
GDR Siddha, Ground Floor, N Road
Bistupur, Opposite St. Mary's Church,
Jamshedpur - 831 001
Phone No: 022-6932 7800
e-mail: CIC@LK-EA.com

Lauritz Knudsen Electrical & Automation
Unnati Building, 2nd Floor,
Automation Campus, A-600, TTC Industrial
Area Shil-Mahape Road, Mahape,
Navi Mumbai - 400 710
Phone No: 022-6932 7800
e-mail: CIC@LK-EA.com

Lauritz Knudsen Electrical & Automation
10th Floor, Titaanium Business,
Bhimrad Road, Althan
Surat - 395 017
Phone No: 022-6932 7800
e-mail: CIC@LK-EA.com

Lauritz Knudsen Electrical & Automation
3rd Floor, 1&2 Vijay Park,
Main Chakrata Road, Opp. Anandam,
Near Ballupur chowk,
Dehradun - 248 001
Phone No: 022-6932 7800
e-mail: CIC@LK-EA.com

Lauritz Knudsen Electrical & Automation
Business Communication Centre
2nd Floor, Chiramel Chambers,
Kurisupally Road, Ravipuram,
Kochi - 682 015
Phone No: 022-6932 7800
e-mail: CIC@LK-EA.com

Lauritz Knudsen Electrical & Automation
M1 & M2, Mezzanine Floor,
Himalaya Excellency,
Plot No. C-47, Pratap Nagar Square,
Nagpur - 440 022
Phone No: 022-6932 7800
e-mail: CIC@LK-EA.com

Lauritz Knudsen Electrical & Automation
11th Floor, Block-D, Notus IT Park,
Sarabhai Campus, Bhailal Amin Marg,
Vadodara - 390 023
Phone No: 022-6932 7800
e-mail: CIC@LK-EA.com

Lauritz Knudsen Electrical & Automation
Ground Floor, B-27,
Biplab Rashbihari Sarani,
Sector 2A, Bidhan Nagar,
Durgapur - 713 212
Phone No: 022-6932 7800
e-mail: CIC@LK-EA.com

Lauritz & Knudsen Electrical & Automation
207, 2nd floor, Revolution Complex,
Station Road, E Ward,
Next to Pedestrian Bridge,
Kolhapur - 416 001
Phone No: 022-6932 7800
e-mail: CIC@LK-EA.com

Lauritz Knudsen Electrical & Automation
2nd Floor, Samarth House,
Opposite Titan World,
Samarth Nagar, Mahatma Nagar,
Nasik - 422 005
Phone No: 022-6932 7800
e-mail: CIC@LK-EA.com

Lauritz Knudsen Electrical & Automation
Qubexpro Business Centre,
4th Floor, V Mall, Above Lifestyles,
Facor Layout, Waltair Uplands,
Visakhapatnam - 530 003
Phone No: 022-6932 7800
e-mail: CIC@LK-EA.com

Lauritz Knudsen Electrical & Automation
6th Floor, Exotica Greens, A Block, 191,
R G Baruah Road, Guwahati Central,
Guwahati - 781 005
Phone No: 022-6932 7800
e-mail: CIC@LK-EA.com

Lauritz Knudsen Electrical & Automation
2nd Floor, BN3, Salt Lake, Sector-V,
Kolkata - 700 091
Phone No: 022-6932 7800
e-mail: CIC@LK-EA.com

Lauritz Knudsen Electrical & Automation
A-25, 1st Floor, Imperia Complex,
Mohan Corporative Industrial Estate,
Near Sarita Vihar Metro Station,
Mathura Road,
New Delhi - 110 044
Phone no: 022-6932 7800
e-mail: CIC@LK-EA.com

Product improvement is a continuous process. For the latest information and special application, please contact any of our offices listed here. Product photographs shown for representative purpose only.

Lauritz Knudsen
Electrical & Automation

Lauritz Knudsen Electrical & Automation, Electrical Standard Product
A/600, Shil-Mahape Road, TTC Industrial Area, MIDC Thane, Navi Mumbai, 400 710,
Maharashtra, Phone No: 022-6722 6300 | Web: www.LK-EA.com

Customer Interaction Center (CIC)
Phone no: 022-6932 7800
Web: www.LK-EA.com | e-mail: CIC@LK-EA.com